3-15-95

'95 MAR 15 A9:44
DEPT. OF ADMIN
BLDG. CODES & STDS. DIV.

FUQUA HOMES

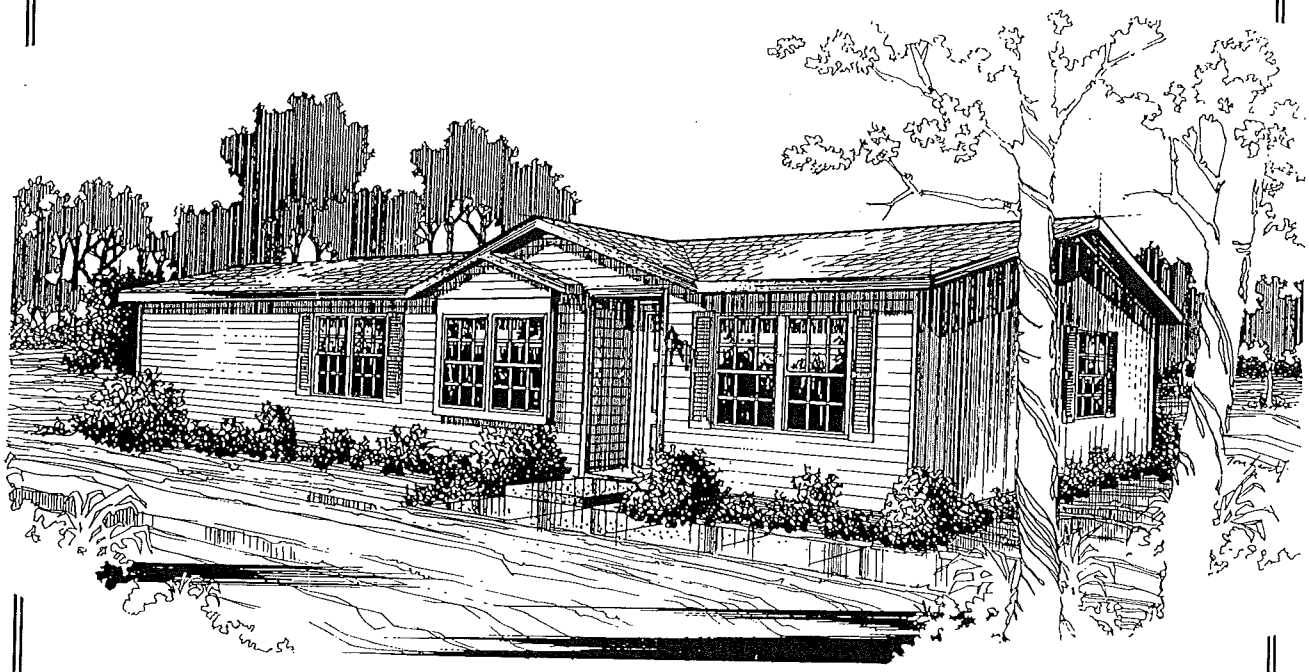

SET UP MANUAL

FUQUA HOMES, INC.

"The Better Idea Homes"

RADCO FEDERAL MANUFACTURED HOUSING CONSTRUCTION & SAFETY STANDARDS

JULY 21 1993

23

APPROVED

Fuqua Homes, Inc. SUA-28

Setup Addendum for
New requirements for Anchoring Instructions

The following requirements are in addition to Anchoring and Tiedown instructions found in the Fuqua Homes Setup Manual.

-Anchors shall have a minimum working capacity of 3150 lbs with the load applied at an angle (between the strap and vertical projection of the anchor) not to exceed 40°.

- Anchors should be certified by a profession engineer, architect, or a nationally recognized testing laboratory as to their resistance, based on the maximum angle of the diagonal tie and or vertical tie loading and angle of anchor installation and type of soil in which the anchor is to be installed.

- Ground anchors should be embedded below the frost line and at least 12" above the water table.

- Ground anchors should be installed to their full depth and, stabilizer plates should be installed to provide added resistance to overturning and sliding forces.

-Anchoring equipment should be certified by a professional engineer or architect to resist the specified forces in accordance with testing procedures in ASTM Standard Specification D3953-91, Standard Specifications for Strapping, flat Steel, and Seals.

RADCO FEDERAL MANUFACTURED HOUSING CONSTRUCTION & SAFETY STANDARDS JUL 13 1994 23 APPROVED

FUQUA HOMES

"The Better Idea Homes"

FUQUA HOMES, INC., 7100 SOUTH COOPER, ARLINGTON, TEXAS 76017

3-08 (11-15-93)

INTRODUCTION

Fuqua Homes, Inc. has engineered, constructed and inspected each of its homes to conform to the Federal Mobile Home Construction and Safety Standards in effect at the time of manufacture.

This manual contains specific instructions which are required to ensure the correct installation of your home. Even with this manual, the set-up should only be performed by a qualified installer. The testing of various utility systems and their proper connection must only be performed by experienced personnel. Compliance to the procedures in this manual are essential in order to maintain full warranty coverage and avoid service problems. It should be noted that many of the illustrations and instructions apply to multi-sectional homes only and are not used in the set-up of single sectional homes.

Recommended procedures contained in this manual may be altered when justified by field experience. The alternate method must result in a final condition at least equal to the condition which would have resulted by conforming to the details and specifications contained herein. For example, on multi-section installation, it may be advantageous to connect at the floor line prior to connecting at the roof line or vice versa. Either method is acceptable provided the fastener schedule is followed.

Many times throughout this text, the words "shall", "must", "should" and "may" are used. The words "shall" or "must" indicate a requirement which is essential to satisfactory and safe product performance. The words "should" or "may" indicate a recommendation or advice which is not essential and not required but which may be useful or helpful.

Because new products and methods are constantly being introduced, additional or revised instructions may be required. Applicable addenda may be found inside the back cover of this manual.

THIS MANUAL DESIGNED FOR HOME MODEL # _____

SERIAL # _____

Numerous "Signal Panels" are located throughout this manual. These signal panels call your attention to potentially hazardous conditions which you should be aware of as you setup this house. Be sure to review the definitions below and look for the Signal Panels interspersed throughput this manual.

! ! ! DANGER ! ! ! Danger is used to indicate the presence of a hazard which **will** cause severe personal injury, death, or substantial property damage if the warning is ignored.

! ! ! WARNING ! ! ! Warning is used to indicate the presence of a hazard which **can** cause severe personal injury, death, or substantial property damage if the warning is ignored.

! ! ! CAUTION ! ! ! Caution is used to indicate the presence of a hazard which **will or can** cause minor personal injury or property damage if the warning is ignored.

! ! ! NOTICE ! ! ! Notice is used to notify people of information which is important but not hazard-related.

TABLE OF CONTENTS

INTRODUCTION 1

TABLE OF CONTENTS 2

FOUNDATION SYSTEM 3
General; Moisture control; Perimeter supports; Piers, footings & soil requirements; Pier loads at frame; Pier selection instructions; Pier loads at column locations; Pier and footing notes; Footing size table; Pier loads at sidewall openings

POSITIONING & ASSEMBLY 11
Positioning the first section; Positioning the second section; Floor Connection; Alignment procedure; Ridge beam connection; Column supports; Ridge closure; Endwall connections; Hinged rafter chord assembly (optional)

EXTERIOR CLOSURE 15
General information; Vinyl lap siding; Vertical plywood or hardboard siding; Log siding; Horizontal hardboard lap siding; Bottom closure patching; Under carriage protection

ANCHORING SYSTEM 18

INTERIOR FINISH 21
Wall joints; Ceiling joints; Carpet

UTILITY CONNECTIONS 23
General; Water system; Drainage system; Gas system; Heating system; Electrical system

FIREPLACE & APPLIANCE INSTALLATION 29
Fireplace installation; Clothes dryer exhaust; Skirting; Air conditioner installation; Evaporative cooler; Exterior light connection

FINAL INSPECTION 32
General; Exterior Siding & Trim; Roofs; Clearances; Operational Check

RELOCATION 33

FOUNDATION SYSTEM

GENERAL

Most mobile homes constructed by Fuqua Homes are designed to be supported by a "pier and beam" foundation. A home constructed in this manner utilizes the steel undercarriage as an integral part of the foundation system. The weight of the home is supported by the undercarriage which is placed on a series of "columns" or "piers". All Fuqua Homes are designed to be anchored to the ground to resist wind forces with frame ties only. Over-the-roof tie-down straps may be used in conjunction with the frame ties, if preferred.

The piers on which this home is to be placed must be capable of sustaining the total weight of the home, its contents, plus additional temporary loads caused by the wind or snow. As the temporary loads caused by the elements vary throughout the country, the Department of Housing and Urban Development has established specific design requirements to resist these forces. Zone maps reflecting these requirements are shown on a Certificate of Compliance sheet which is usually posted inside a kitchen cabinet door, inside the furnace compartment or in some other convenient location. Other specific design data to which this home was constructed will also be shown on the compliance certificate. This home must not be placed in an area of the country where the construction is not adequate based on the design requirements.

In various parts of the country, local governing agencies occasionally impose additional loading requirements which may differ from the design conditions of your home. It is the responsibility of the homeowner, dealer, and/or the set-up personnel to assure that the actual construction, foundation and set-up meet all local building requirements and that all required inspections are called for. The foundation system selected must be compatible with local soil conditions.

MOISTURE CONTROL

The area beneath and around the home must be graded and sloped to avoid surface water accumulation. Should moisture be allowed to stand under the home for long periods of time, the unavoidable result will be deterioration of the floor decking and siding.

If your home is skirted (see skirting in Exterior Closure section), an approved ground vapor barrier, minimum 6 mil visqueen, shall be placed on the ground beneath the home. To be fully effective, the edges of the vapor barrier material should be overlapped a minimum of 12 inches and have no holes. Failure to provide a vapor barrier could void the warranty on the flooring and siding. *See Skirting in Exterior Closure section for ventilation requirements.*

PERIMETER SUPPORTS

The design of the floor system of this house may require the installation of perimeter supports. If this is the case, the serial number stamped on the front crossmember will end in the letters "PS". Perimeter supports are designed to carry roof and wall loads and must be installed when required by the design. Failure to install these additional supports will result in excess floor crowning and/or total floor failure. If perimeter supports are required, separate Foundation Details or Perimeter Support Details will be provided.

PIERS, FOOTINGS & SOIL REQUIREMENTS

Typically, concrete blocks or adjustable steel piers are used for piers. The piers selected should be labeled to indicate the maximum pier capacity or the supplier should certify the maximum capacity. In either case, the maximum pier capacity must not be exceeded. Normal pier height may not exceed 48 in. When site conditions require the home be supported at heights greater than 48 in., the foundation system must be designed by a registered professional engineer.

Footings and foundations, unless specifically designed otherwise, shall be constructed of masonry, reinforced concrete or pressure treated lumber. In geographical areas subject to freezes, the bottom of foundations must extend below the frost line established by local records. Footings shall be so designed that the allowable bearing capacity of the soil is not exceeded. Footings shall rest on undisturbed or minimum ninety percent (90%) compacted soil of uniform density and thickness.

Where the bearing capacity of the soil is not definitely known or is in question, a soil bearing capacity of 1000 psf shall be used in the foundation design or engineering soil tests shall be performed to determine the actual soil bearing capacity for the site in question.

STATE OF TEXAS
JERALD W. JONKEL
49961
REGISTERED PROFESSIONAL ENGINEER

Foundations should be built upon natural solid ground. Where solid ground does not occur at the foundation depth, such foundation shall be extended down to natural solid ground or piles should be used. Foundations built upon mechanically compacted earth or fill material are subject to the approval of local building officials to show evidence that the proposed loads will be adequately supported.

PIER LOADS AT FRAME

There are several factors that must be considered when selecting and installing piers. The most important are: (1) the size of the home; (2) the load carrying capacity of the pier design; (3) the soil bearing capacity; (4) the design roof load; and (5) the spacing between the individual piers. The following instructions have been prepared to assist you in meeting all necessary requirements.

PIER SELECTION INSTRUCTIONS

1. Determine the load carrying capacity of the piers to be used. This manual has been designed for minimum 4000 lbs. steel piers and concrete blocks conforming to ASTM C-90 or C-145. Steel piers must be listed or labeled for the minimum 4000 lbs. working load. The working load of the concrete piers shall be as shown on page 6.

2. Determine the pier load from the Frame Pier Loading Tables based on the roof load, floor width, eave width and pier spacing. Contact your local building department for minimum roof load requirements where the home is being set. The design roof load of the home may be found on the back of the Homeowners Manual or on the Certificate of Compliance located in the home. If you are unable to locate this information, contact the Dealer where the home was purchased. The pier load may not exceed the allowable load for the pier being used.

3. Based on the pier load, from the Frame Pier Loading Tables, and the soil bearing capacity at the site, select the footing or pad size to be used from the Footing Table on page 8.

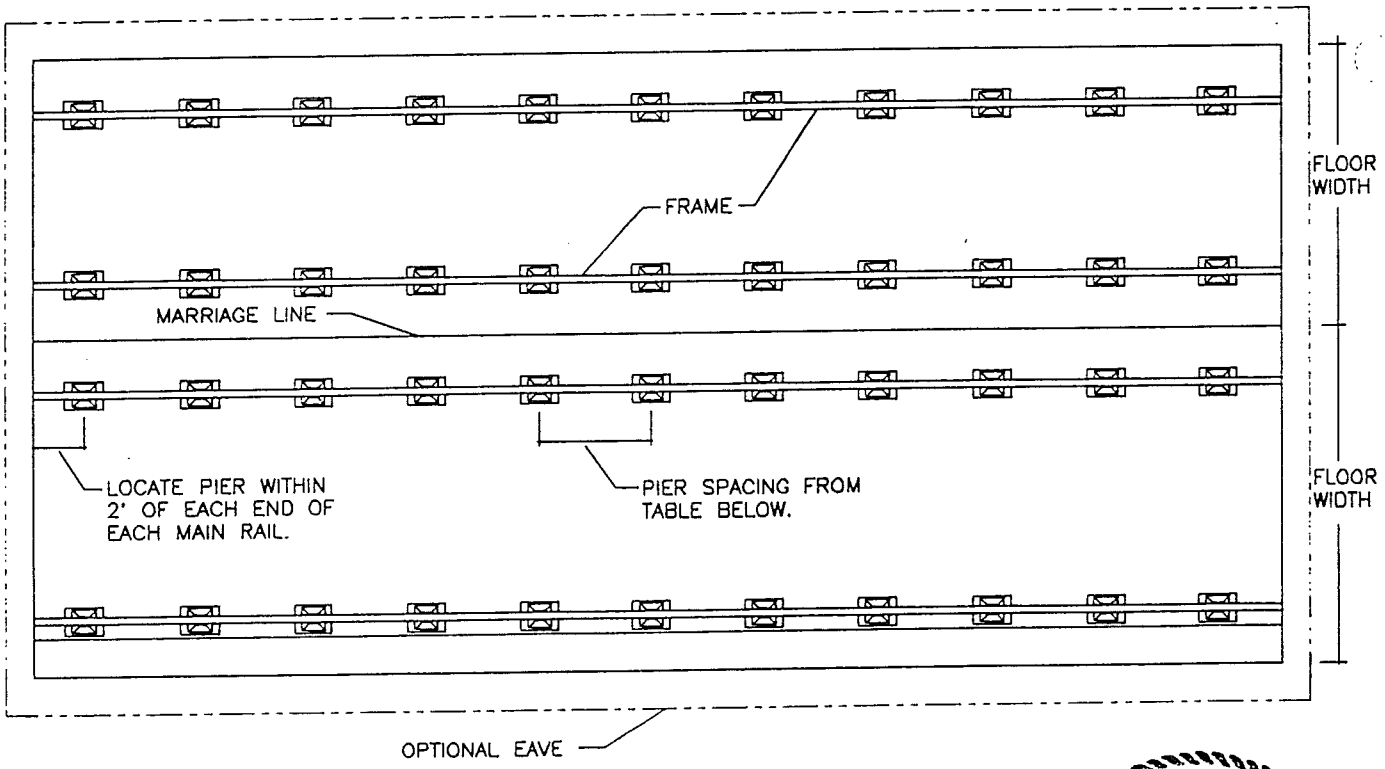

FRAME PIER LOCATION DIAGRAM
ILLUSTRATION 1

STATE OF TEXAS
JERALD W. KUNKEL
49961
REGISTERED PROFESSIONAL ENGINEER

5-92

PIER LOADS AT COLUMN LOCATIONS

In addition to providing piers for supporting the frame, piers are also required to support concentrated roof loads along the marriage line.

Concentrated (column) load locations are designated by a strap or label fastened to the floor at the location of each column. Each column load is specified on the Column Support Requirement document located in the back of this setup manual.

FRAME PIER LOADING TABLES

USE THIS TABLE FOR PIERS ON THE MARRIAGE LINE SIDE AND ON THE OUTSIDE WHEN NO EAVES ARE PRESENT.

FLOOR WIDTH (inches)	ROOF LIVE LOADS: PIERS SPACED AT 4 FOOT O. C.					PIERS SPACED AT 6 FOOT O. C.					PIERS SPACED AT 8 FOOT O. C.			
	20 psf	30 psf	40 psf	60 psf	80 psf	20 psf	30 psf	40 psf	60 psf	80 psf	20 psf	30 psf	40 psf	60 psf
118	1829	2026	2223	2655	3049	2744	3039	3334	3983	4573	3659	4052	4445	5311
140	2123	2356	2589	3103	3569	3184	3534	3884	4654	5354	4245	4712	5179	6205
164	2443	2716	2989	3591	4137	3664	4074	4484	5386	6206	4885	5432	5979	7181
188	2763	3076	3389	4079	4705	4144	4614	5084	6118	7058	5525	6152	6779	N.A.

USE THIS TABLE FOR PIERS SUPPORTING THE OUTER FRAME WITH MAXIMUM 24" EAVES.

FLOOR WIDTH (inches)	ROOF LIVE LOADS: PIERS SPACED AT 4 FOOT O. C.					PIERS SPACED AT 6 FOOT O. C.					PIERS SPACED AT 8 FOOT O. C.			
	20 psf	30 psf	40 psf	60 psf	80 psf	20 psf	30 psf	40 psf	60 psf	80 psf	20 psf	30 psf	40 psf	60 psf
118	2094	2379	2663	3290	3860	3141	3568	3995	4835	5789	4187	4757	5327	6580
140	2383	2703	3024	3728	4368	3575	4055	4535	5592	6553	4766	5407	6047	7456
164	2700	3059	3419	4209	4927	4050	4589	5128	6313	7391	5400	6119	6837	N.A.
188	3018	3416	3815	4691	5488	4527	5125	5722	7037	N.A.	6036	6833	7630	N.A.

USE THIS TABLE FOR PIERS SUPPORTING THE OUTER FRAME WITH MAXIMUM 30" EAVES.

FLOOR WIDTH (inches)	ROOF LIVE LOADS: PIERS SPACED AT 4 FOOT O. C.					PIERS SPACED AT 6 FOOT O. C.					PIERS SPACED AT 8 FOOT O. C.			
	20 psf	30 psf	40 psf	60 psf	80 psf	20 psf	30 psf	40 psf	60 psf	80 psf	20 psf	30 psf	40 psf	60 psf
136	2402	2740	3078	3821	4496	3604	4110	4617	5731	6744	4805	5480	6156	7641

NOTES:

1. PIER LOADS ARE EXPRESSED IN POUNDS PER PIER LOCATION.
2. N.A. INDICATES PIERS NOT AVAILABLE UNDER THESE CONDITIONS.
3. USE ONLY PIERS RATED TO MEET THE MINIMUM PIER LOADING REQUIREMENTS SHOWN ABOVE.
4. MAXIMUM PIER SPACING MAY NOT EXCEED 96 INCHES ON CENTER.

STATE OF TEXAS
JERALD W. KUNKEL
49961
REGISTERED PROFESSIONAL ENGINEER

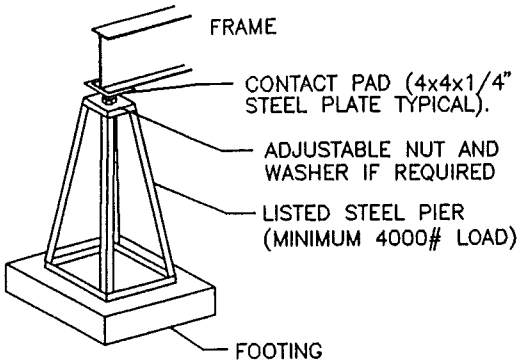

SINGLE STEEL PIER
(MAX 4000# LOAD)

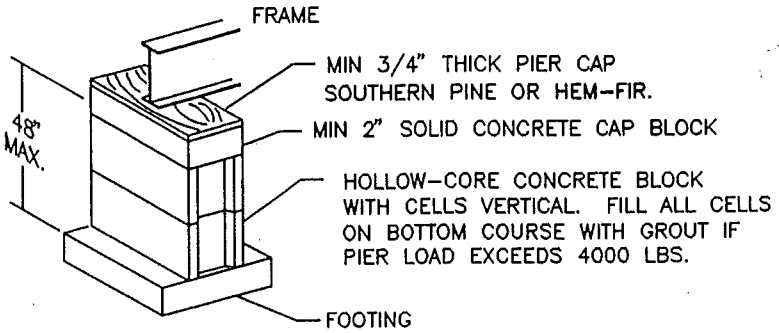

BLOCK ORIENTATION SHOULD BE ALTERNATED FROM PARALLEL TO PERPINDICULAR WITH THE FRAME FOR MAXIMUM STABILITY.

CONCRETE/MASONRY PIER
(MAX 8000# LOAD)

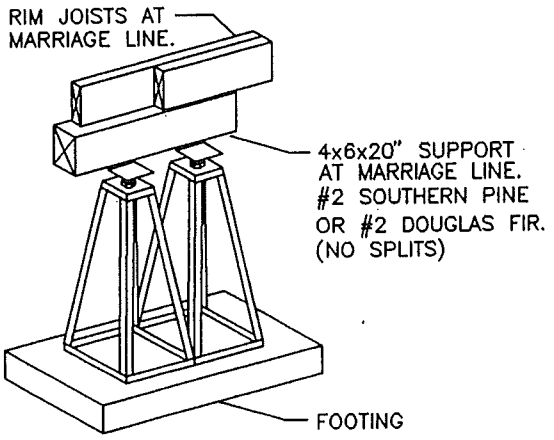

DOUBLE STEEL PIER
(MAX 8000# LOAD)

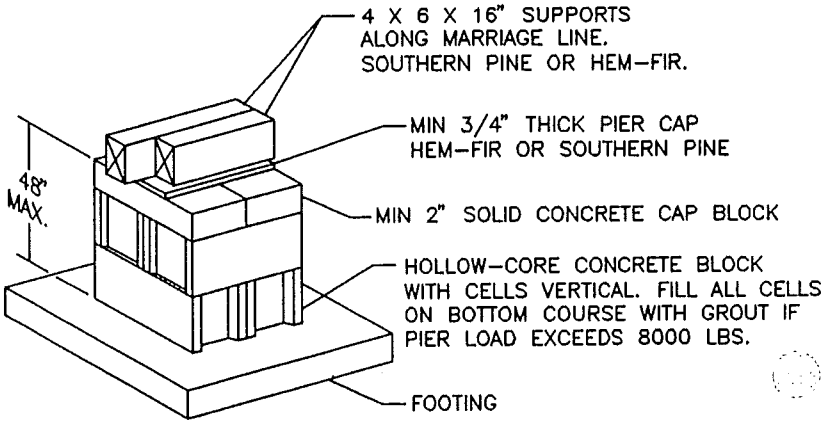

CONCRETE/MASONRY PIER
(MAX 16000# LOAD)

ALL PIERS SHALL HAVE A BASE SIZE OF 10" X 10". ADJACENT PIERS SHALL HAVE CENTER TO CENTER SPACING NOT EXCEEDING 14 INCHES. (TYP.)

WHEN SOUTHERN PINE OR HEM-FIR ARE CALLED FOR, OAK OR WALNUT OF THE SAME GRADE MAY BE SUBSTITUTED.

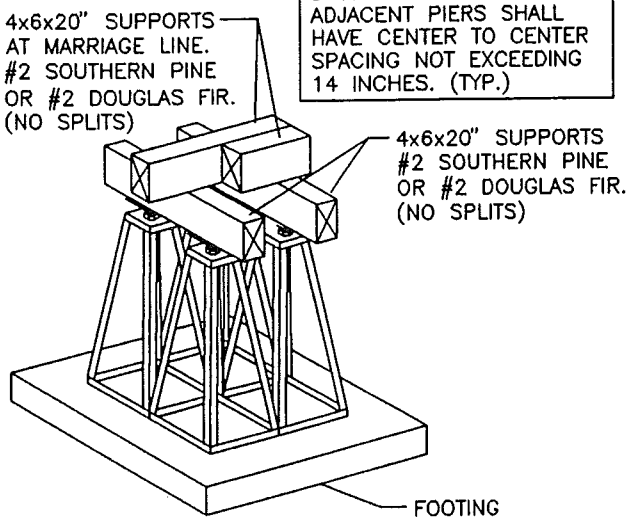

QUAD STEEL PIER
(MAX 16,000# LOAD)

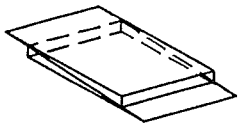

SHIM NOTES:

1. USE SHIMS BETWEEN THE FRAME OR JOISTS AND THE PIER CAP FOR FINAL LEVELING.
2. SHIMS SHALL BE MAX. 1" THICK AND MIN. 4" WIDE AND 6" LONG. ALL SHIMS SHALL BE SOUTHERN PINE OR DOUGLAS FIR.
3. SHIMS ARE TO BE FITTED AND DRIVEN TIGHT BETWEEN THE PIER CAP AND FRAME OR JOISTS.
4. ONE SQ. IN. OF CONTACT IS REQUIRED (FOR EACH 520# OF LOAD) BETWEEN THE BEAM ABOVE AND THE SHIM AS WELL AS BETWEEN THE SHIM AND THE PIER.

LEVELING SHIMS

PIER CONSTRUCTION DETAILS
ILLUSTRATION 2

STATE OF TEXAS
JERALD W. KUNKEL
49961
REGISTERED PROFESSIONAL ENGINEER

6-93

PIER & FOOTING NOTES:

1. All steel piers must be listed or labeled for minimum 4000 pound working load.

2. Contact pad on steel pier to be minimum 4" x 4" x 1/4" thick steel.

3. Adjustable screw on top of steel piers may not have more than 2" of exposed thread above the nut.

4. All piers shall be centered on footings. All piers shall have a length to width ratio not exceeding 2.0.

5. All masonry units shall conform to ASTM C-90 or ASTM C-145. (fm'=2000 psi min.)

6. All lumber and plywood within 6" of the ground or in contact with concrete shall be pressure treated with the following information available.

   * Identity of the company doing treatment and the month and year treatment performed.

   * Symbol for the type of preservative used.

   * The American Wood Preservers Bureau Quality control trademark (report no. AA-517).

   * The letters "tso" indicating "treatment service only" where applicable.

   * The proper grade marking to identify the specie and grade of wood.

   * AWPB-FDN (identifies authorization under this report.

7. Where lumber is cut after treatment, the cut surface shall be brush-coated with minimum 3% solution of the same preservative used in the original treatment; or shall be field treated in conformance with AWPA standard M4-80 using a 5% solution of pentachlorophenol, copper, naphthenate containing a minimum 2% copper metal, a 3% solution of APA, CCA, types A, B, or C, or a 5% solution of FCAP or ACC: or creosote in conformance with AHPA.

8. In geographic areas where freezing occurs, the bottom of the footing shall extend below the frost line.

9. Footings shall rest on undisturbed or minimum 90% compacted soil of uniform density and thickness. No organic material shall be permitted beneath the footing. Check with local code officials to insure that footing depth below grade satisfies local code requirements.

10. Where termite hazard exists, precautions should be taken to prevent termites from attacking the wooden structure.

11. Site must be adequately graded so that water drains away from the foundation and does not accumulate under the home.

12. Soil or gravel under wooden footing shall remain dry and be free draining.

STATE OF TEXAS
JERALD W. KUNKEL
49961
REGISTERED PROFESSIONAL ENGINEER

S·92

FOOTING SIZE TABLE

Required pier load Capacity (pounds)	Minimum Footing Dimension Soil Bearing Capacity 1000 psf	1500 psf	2000 psf	2500 psf	3000 psf
1000 lbs	208 sq. in.	134 sq. in.	99 sq. in.	79 sq. in.	65 sq. in.
1200 lbs	240 sq. in.	155 sq. in.	114 sq. in.	90 sq. in.	75 sq. in.
1400 lbs	273 sq. in.	175 sq. in.	129 sq. in.	103 sq. in.	85 sq. in.
1600 lbs	305 sq. in.	196 sq. in.	145 sq. in.	114 sq. in.	95 sq. in.
1800 lbs	336 sq. in.	217 sq. in.	159 sq. in.	127 sq. in.	105 sq. in.
2000 lbs	368 sq. in.	237 sq. in.	175 sq. in.	138 sq. in.	114 sq. in.
2200 lbs	401 sq. in.	258 sq. in.	190 sq. in.	151 sq. in.	125 sq. in.
2400 lbs	433 sq. in.	278 sq. in.	205 sq. in.	163 sq. in.	135 sq. in.
2600 lbs	465 sq. in.	298 sq. in.	220 sq. in.	174 sq. in.	144 sq. in.
2800 lbs	496 sq. in.	320 sq. in.	235 sq. in.	187 sq. in.	155 sq. in.
3000 lbs	528 sq. in.	340 sq. in.	251 sq. in.	198 sq. in.	164 sq. in.
3200 lbs	560 sq. in.	360 sq. in.	266 sq. in.	211 sq. in.	174 sq. in.
3400 lbs	593 sq. in.	381 sq. in.	281 sq. in.	222 sq. in.	185 sq. in.
3600 lbs	625 sq. in.	401 sq. in.	296 sq. in.	235 sq. in.	194 sq. in.
3800 lbs	656 sq. in.	423 sq. in.	311 sq. in.	246 sq. in.	204 sq. in.
4000 lbs	688 sq. in.	443 sq. in.	327 sq. in.	259 sq. in.	214 sq. in.
4500 lbs	769 sq. in.	494 sq. in.	364 sq. in.	289 sq. in.	239 sq. in.
5000 lbs	848 sq. in.	546 sq. in.	403 sq. in.	318 sq. in.	263 sq. in.
5500 lbs	929 sq. in.	597 sq. in.	440 sq. in.	349 sq. in.	289 sq. in.
6000 lbs	1006 sq. in.	649 sq. in.	478 sq. in.	379 sq. in.	313 sq. in.
6500 lbs	1089 sq. in.	700 sq. in.	516 sq. in.	409 sq. in.	339 sq. in.
7000 lbs	1168 sq. in.	752 sq. in.	554 sq. in.	438 sq. in.	363 sq. in.
7500 lbs	1249 sq. in.	803 sq. in.	592 sq. in.	469 sq. in.	388 sq. in.
8000 lbs	1328 sq. in.	854 sq. in.	630 sq. in.	498 sq. in.	412 sq. in.
8500 lbs	1409 sq. in.	906 sq. in.	667 sq. in.	529 sq. in.	438 sq. in.
9000 lbs	1488 sq. in.	957 sq. in.	706 sq. in.	559 sq. in.	462 sq. in.
9500 lbs	1569 sq. in.	1008 sq. in.	743 sq. in.	589 sq. in.	488 sq. in.
10000 lbs	1648 sq. in.	1060 sq. in.	782 sq. in.	618 sq. in.	512 sq. in.
11000 lbs	1808 sq. in.	1163 sq. in.	857 sq. in.	679 sq. in.	561 sq. in.
12000 lbs	1968 sq. in.	1266 sq. in.	933 sq. in.	738 sq. in.	611 sq. in.
13000 lbs	2128 sq. in.	1369 sq. in.	1009 sq. in.	798 sq. in.	661 sq. in.
14000 lbs	2288 sq. in.	1472 sq. in.	1085 Sq. in.	859 sq. in.	710 sq. in.
15000 lbs	2448 sq. in.	1574 sq. in.	1160 sq. in.	918 sq. in.	760 sq. in.
16000 lbs	2608 sq. in.	1677 sq. in.	1236 sq. in.	979 sq. in.	809 sq. in.
18000 lbs	2928 sq. in.	1883 sq. in.	1388 sq. in.	1098 sq. in.	909 sq. in.
20000 lbs	3248 sq. in.	2089 sq. in.	1539 sq. in.	1218 sq. in.	1008 sq. in.

NOTES:

1. Footing configurations must have a length to width ratio that does not exceed 2.5 to 1.

2. Footing size shall not be less than 144 sq. in.

STATE OF TEXAS
JERALD W. KUNKEL
49961
REGISTERED PROFESSIONAL ENGINEER

5.92

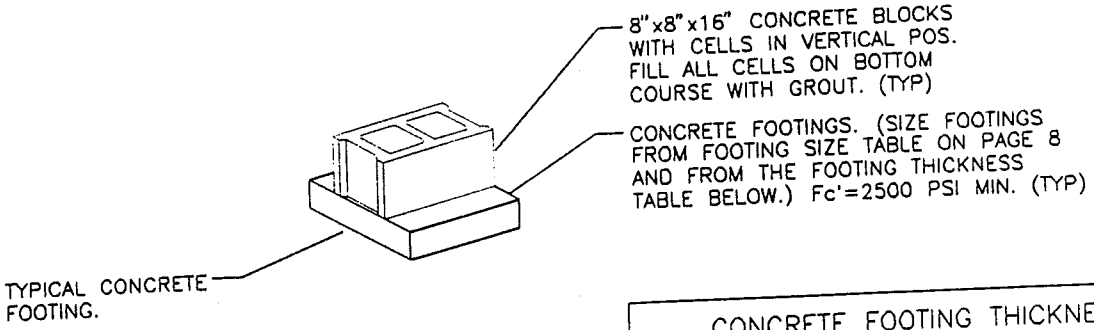

CONCRETE FOOTING

CONCRETE FOOTING THICKNESS TABLE						
	MAX DIST FROM PIER TO EDGE OF FOOTING. UNREINFORCED			REINFORCED		
FOOTING THICKNESS	MAX SOIL BEARING * 1000	2000	3000	MAX SOIL BEARING * 1000	2000	3000
4 in. **	0 in.	0 in.	0 in.	N/A	N/A	N/A
6 in.	7 in.	6 in.	5 in.	N/A	N/A	N/A
8 in.	10 in.	8 in.	7 in.	22 in.	16 in.	13 in.

* MAX. SOIL BEARING PRESSURE IN PSF.
** 4" CONCRETE FOOTINGS MAY NOT BE USED WITH STEEL PIERS.

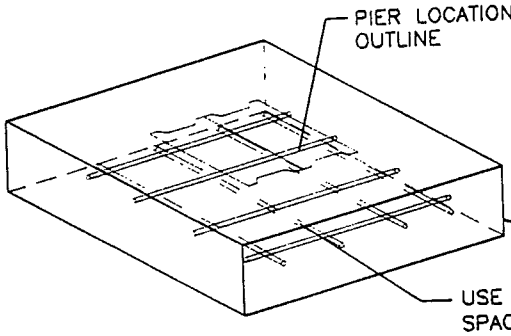

CONCRETE FOOTING

NOTES:
1. THE LONGEST HORIZONTAL DIMENSION OF ALL PIERS MAY NOT BE GREATER THAN TWICE THE SHORTEST HORIZONTAL DIMENSION OR THE PIER.
2. ALL CONCRETE FOOTINGS MUST BE NORMAL WEIGHT (145 PCF).
3. CONCRETE FOOTINGS FOR STEEL OR CONCRETE PIERS WITH LOADS EXCEEDING 8000#, MUST BE SQUARE.
4. 8" THICK FOOTINGS ARE REQUIRED FOR PIER LOADS EXCEEDING 8000# WHEN SOIL BEARING PRESSURE EXCCEDS 2000 PSF.

STATE OF TEXAS
JERALD W. KUNKEL
49961
REGISTERED PROFESSIONAL ENGINEER
5-92

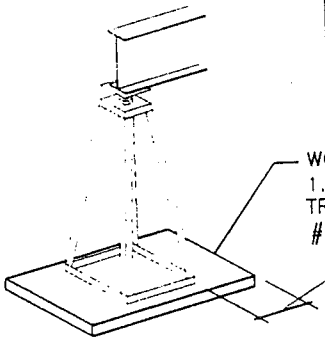

WOOD FOOTING TABLE		
MAX DIST FROM PIER TO EDGE OF FOOTING		
MAX SOIL BEARING *		
1000	2000	3000
11"	7"	5"

* MAX SOIL BEARING PRESSURE IN PSF.

WOODEN FOOTING
(WITH SINGLE FOOTING PAD)

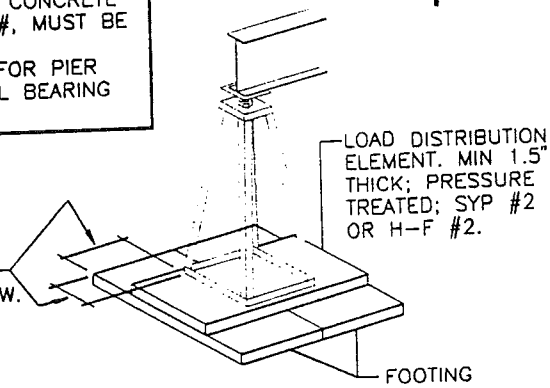

WOODEN FOOTING
(WITH DOUBLE FOOTING PAD)

FOOTING DETAILS
ILLUSTRATION 3

Determine footing size from Footing Size Table based on pier load and soil bearing capacity.

PIER LOADS AT SIDEWALL OPENINGS

Large openings in exterior load bearing walls produce concentrated loads at the ends of the header supporting the roof load. As a result of these concentrated (column) loads, a perimeter pier support is required on each end of headers greater than 4 feet in length. The header may be an integral part of the sidewall as shown with the bay window at the left below or it may be directly above the window as shown on the bay window to the right. The header will be located below and support the roof trusses. Therefore if it is located as shown with the bay window on the left, it will be visible below the ceiling, and the ceiling height of the bay will be offset and lower than in the remainder of the home. If the header is located above the window as with the bay to the left, the ceiling will continue along the same plane to the window. Once you have determined the header location, you can find the load at each end of the header based on floor width, eave and roof load from the table below. Then select the proper pier and footing in the same manner as previously as previously described in this section and place it as shown in illustrations 5 and 6.

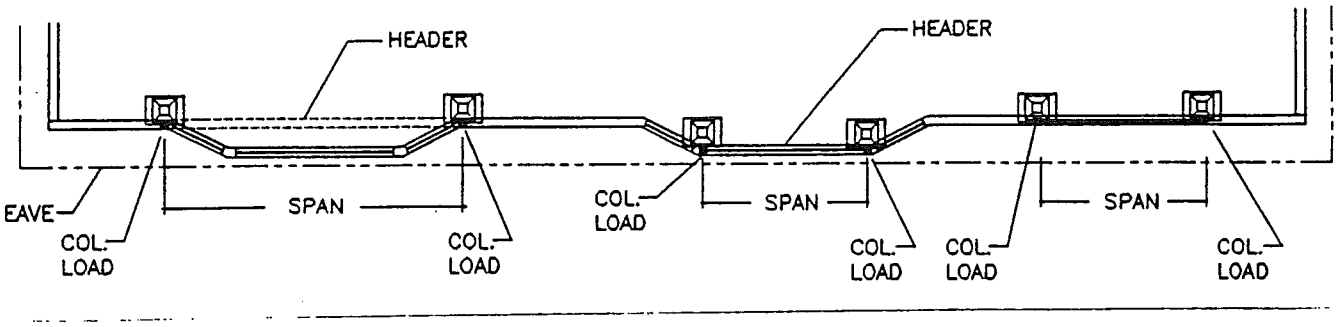

Bearing wall pier location diagram
Illustration 5

HEADER LOADING TABLE

FLOOR and EAVE WIDTH	HEADER SPAN	ROOF LIVE LOAD 20 psf	30 psf	40 psf	60 psf	80 psf
140 in w/24 in	6 ft	880	1188	1496	2112	2728
	8 ft	1120	1512	1904	2688	3472
	10 ft	1360	1836	2312	3264	4216
	12 ft	1600	2160	2720	3840	4960
164 in w/24 in and 186 in w/12 in	6 ft	1012	1320	1672	2376	3036
	8 ft	1288	1680	2128	3024	3864
	10 ft	1564	2040	2584	3672	4692
	12 ft	1840	2400	3040	4320	5520

All loads at end of headers are in pounds.

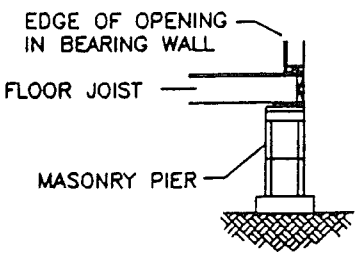

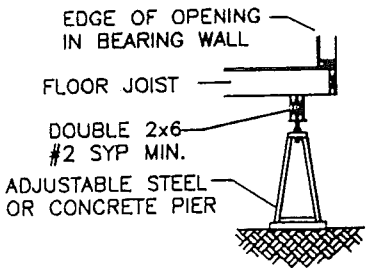

CENTER OF PIER TO BE NOT MORE THAN 8" FROM END OF FLOOR JOIST.

Perimeter pier support
Illustration 6

STATE OF TEXAS
JERALD W. KUNKEL
49961
REGISTERED PROFESSIONAL ENGINEER

POSITIONING AND ASSEMBLY

POSITIONING THE FIRST SECTION

A final check of the site preparation work should be made before the sections are moved into position. If concrete footings are to be used, the concrete should have a minimum of 24 hours of curing time before the piers are set. Longer periods of curing time may be required if the temperature is near the freezing mark.

Once all site work is completed, the first section of the home is ready to be placed in position over the foundation area. Generally it is recommended that the half of the home containing the utility service connections be positioned first. The transporting trucks should be used to position the module as close as possible over the footings.

Final placement, if required, should be made with a dollie device utilizing steel rollers. These dollies are so constructed that hydraulic jacks can be positioned between the rollers and frame members permitting easy sideways movement. Most service crews and installers already have this equipment. Its use will minimize the possibility of frame damage. See Illustration 7.

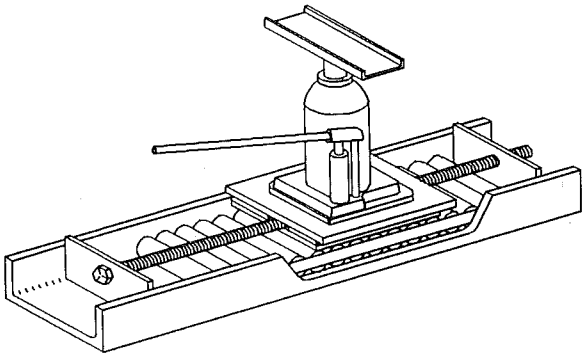

Hydraulic jacking device
Illustration 7

!!! WARNING !!!

Do not work under the home with out adequate support blocking! Failure to heed this warning may result in severe personnel injury or death.

!!! CAUTION !!!

Excessive or non uniform jacking during the positioning, leveling and alignment procedures will cause the home to be unnecessarily racked or twisted and result in drywall damage.

The following steps should be followed in blocking and leveling each module:

a) Place two piers under the front cross member for safety purposes.
b) Locate on the frame the closest blocking point behind the rear spring hanger. Using two hydraulic jacks, (minimum 12 ton capacity), fitted with jacking reinforcing plates (3/8" x 3" x 12"), raise the floor to the desired height and place the required piers in front of and behind the axle area under each I-beam.
c) Wheels and axles may be removed at this time.
d) Move to the front of the home, raise the floor to the desired height and position the piers at the prescribed location. Once this is done the safety piers can be removed.
e) Move to the extreme rear of the unit and repeat the blocking procedure under each I-beam.
f) Repeat the blocking process for all remaining pier locations.
g) As the floor is being blocked, a water level or transit should be used to check the floor levelness in both directions. If wooden wedges or shims are used for height adjustment, they must extend over the full width of the concrete block.
h) To prevent air from entering the home at the mating surfaces, a gasket must be made from the insulation provided in the materials supplied. The insulation should be attached to all mating surfaces with staples. Do not place the material over any opening used for air supply ducts.

Before proceeding with the leveling process, check to be sure the footings and spans are correct. The lowest part of the chassis must be a minimum of twelve (12) inches from the ground in the area of the utility connections. No more than 25% of the frame should be less than 12" above the ground. All wood within 6" of the ground must be pressure treated.

POSITIONING THE SECOND SECTION

Before the second module is moved into position, all polyethylene covering, framing members and shipping braces should be removed from both halves except for the Center Beam Shipping Supports. These supports are not to be removed until the Center Ridge Beams have been attached.

FLOOR CONNECTION

After all close-up material has been removed, position the second section so that the floor seams are flush while keeping the roof slightly apart and the end walls aligned at the floor. This may be accomplished using hydraulic jacks and dollies with rollers as previously described. At this time, place piers under the inside longitudinal beam, draw the floors of the two units together and fasten the floors of the two sections with 20d nails or 4 inch lag screws placed 24 inches on center. The 20d nails may be inserted from the top or bottom of the floor. Minor roof alignment corrections can be performed as the unit is being leveled. See illustration 8.

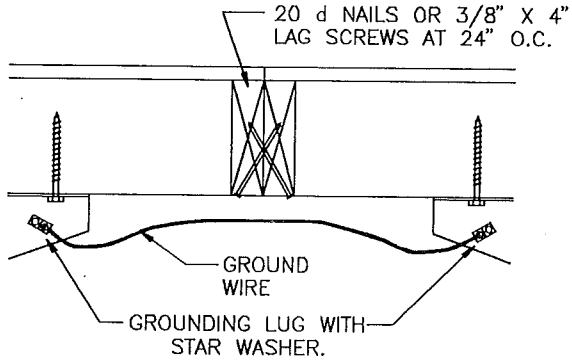

Floor connection detail
Illustration 8

It will be necessary to bond the two chassis assemblies together with grounding lugs and #8 copper wire or #6 aluminum wire. Grounding lugs must be approved for aluminum if aluminum wire is used. Paint penetrating star washers must be used in fastening the grounding lugs to the chassis. This is shown in Illustration 8 and the parts are included in the Set-Up Kit.

ALIGNMENT PROCEDURE

Close the gaps in the ceiling by raising the outside longitudinal beam using at least three hydraulic jacks simultaneously placed in front of and behind the axle area and about half way between the hitch and axle area.

<u>If the roof must be moved forward...</u> with the longitudinal beams evenly supported, carefully raise the outside rear corner of the second section (with a hydraulic jack) and lower the outside front corner. The roof should shift forward until end walls are in alignment. When the walls are aligned, raise the outside beam to close any gaps at the ridge beams.

<u>If the roof must be moved back...</u> with the longitudinal beams evenly supported, carefully raise the outside front corner of the second section (with a hydraulic jack) and lower the outside rear corner. The roof should shift forward until end walls are in alignment. When the walls are aligned, raise the outside beam to close any gaps at the ridge beams.

RIDGE BEAM CONNECTION

Before the ridge beams are connected, the ceiling between the two halves must be flush. If one side of the ceiling is lower than the other, raise the low side using a "T-Bar" made from 2x4's with a hydraulic jack at the bottom. It is best to place the base of the jack across the floor seam to fully distribute the load. The top of the "T-Bar" should be placed only in areas which will later be covered by molding. See Illustration 9.

Occasionally, during the set-up of a double-wide, the ridge beams do not completely close at the top. If the gap is less than 1/2", the ridge beams may be connected together without any special consideration. If the gap exceeds 1/2" but is not over 1", the situation may be corrected by shimming with a 1/2" or larger 4" strip of plywood.

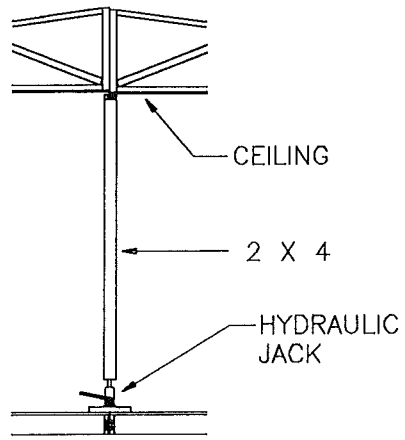

RAISE LOWER CEILING WITH JACK UNTIL BOTH CEILINGS ARE FLUSH.

Ceiling alignment
Illustration 9

After the ceilings of the two units are properly located such that the end walls are aligned and the mating line of the ceiling is in line and flush, the ridge beams should be fastened together with 3/8" x 7" lag screws which have been provided in the Set-Up kit. The lag screws are to be spaced at maximum distance of 32" o.c. and staggered from one side to the other. Prior to inserting each lag screw, it will be necessary to predrill a 1/4" diameter pilot hole. The lag screw must penetrate both ridge beams as shown in Illustration 10.

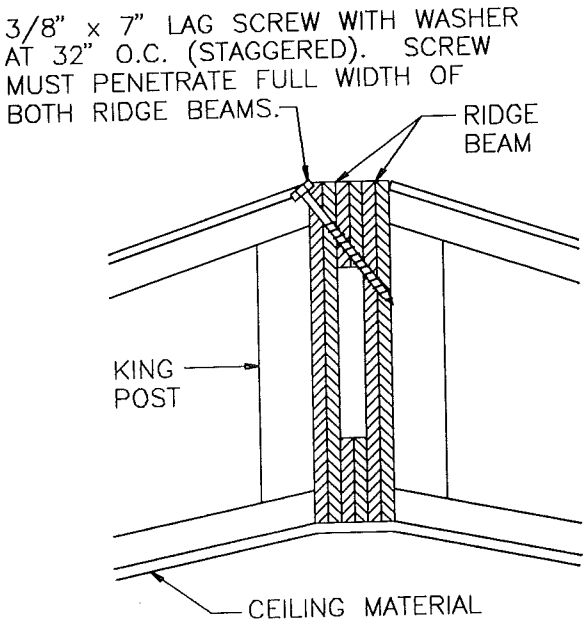

Ridge beam connection
Illustration 10

On houses with galvanized roofs, a reinforced walkway is provided on the roof of each half near the center beam running the length of the house. Travel on the roof should be confined to this area as much as possible. This plywood walkway also serves as the backer for the screws used to secure the metal roof cap. After the ridge beams have been fastened together at the top, remove the ridge beam supports inside the home and proceed to finish blocking and leveling the second half of the home in the same manner as the first. The floor should be checked at the mating seam to be sure both halves are even. Adjustments should be made by raising or lowering the floor using wooden shims or adjustable piers.

COLUMN SUPPORTS

Once the home has been joined, the center roof column support piers are to be installed. The footings required to support the piers should have been prepared at the same time as the other footings. The piers should be constructed in the same manner as those used to support the chassis. (Reference Page 6)

RIDGE CLOSURE

After all foundation supports are in place, the ridge beams should be final checked for ceiling alignment and proper installation of fasteners; then final closeup roofing materials may be installed. If a metal roof is used, refer to Illustration 11 for closeup details. The sealant tape must be applied the full length of the ridge cap and the ridge cap must be secured at maximum intervals of 3". Each screw must compress the sealant tape and penetrate the plywood backing under the metal roof. After all screws have been installed, asphaltic roof coating must be applied to seal the screw heads and cap to roof seam.

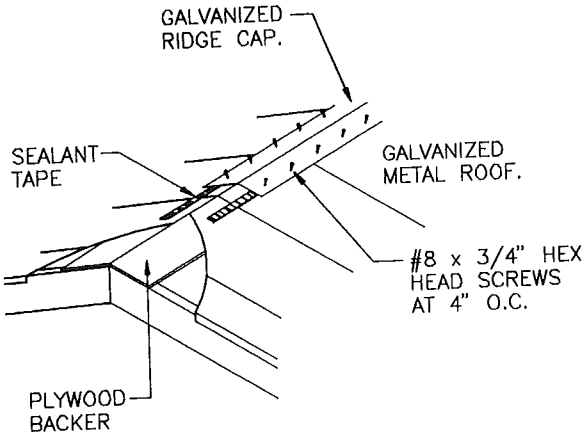

Metal roof closure details
Illustration 11

ENDWALL CONNECTION

Fasten endwalls and marriage walls where they meet using suitable screws or nails as necessary.

If a composition roof is used, refer to Illustration 12 for details on the ridge closure. Staple additional roofing felt centered over ridge. Shingles matching those installed by the manufacturer are shipped with each home. Install these shingles per the manufacturer's instructions, which are printed on the shingle wrapping paper. After installing shingles up to the ridge, cut shingles for ridge cap and install along the ridge per the shingle manufacturer's instructions, making sure the ridge shingles point the same direction as the prevailing wind. This will prevent wind lifting and possible leakage. If a nailer has been provided along the rake eave to prevent transit wind damage to roofing, the nailer must be removed and all nail or staple penetrations sealed with mastic.

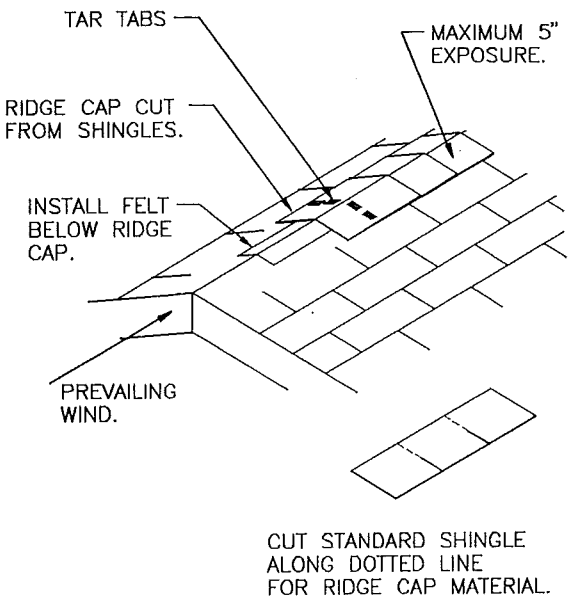

Composition roof closure details
Illustration 12

HINGED RAFTER CHORD ASSEMBLY (Optional)

The recommended procedure for the completion of the "Hinged Roof" is as follows: (See Illustration 13).

1. Remove the protective shipping covering.
2. Lift or jack roof into final position. The roof should be lifted uniformly in order to avoid unnecessary stress in the structural members.
3. Position the hinged king post in the slot provided in the stationary king post and ridge beam.
4. Secure the hinged king post to the ridge beam with 3-10d box nails.
5. Apply roof mastic between layers of shingles at hinged joint.
6. Place the 2x6 splice block on the back side of the front overhang. Secure block with 4-10d nails on each end.

!!! CAUTION !!!

The roof should be jacked uniformly in order to avoid unnecessary stress in the structural members.

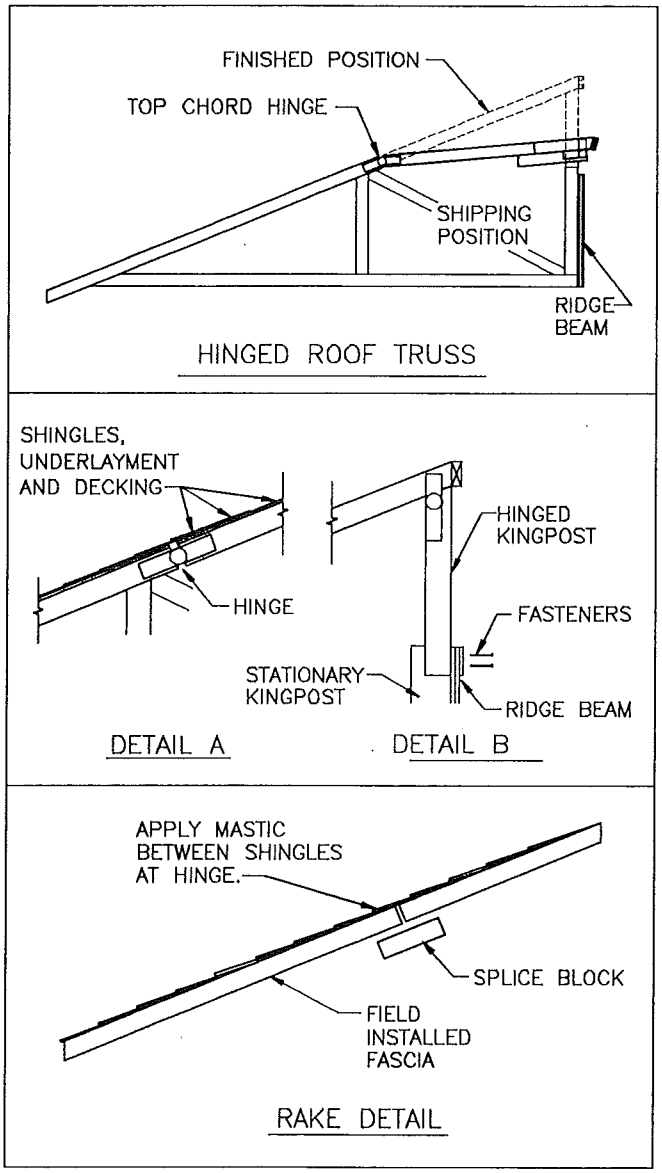

Hinged rafter chord assembly detail
Illustration 13

EXTERIOR CLOSURE

GENERAL INFORMATION

Any one of several types of exterior siding may have been used in the construction of this home. Exterior siding materials have been shipped loose to be installed during set up. The following pages will describe minimum installation procedures to be used when installing this material.

A temporary outer covering may have been used to prevent road damage. If the material used was plastic or some other material which would restrict moisture migration to the outside of the home, this material must be removed before covering the exterior and applying the trim. It should be noted that many homes have special material designed to reduce air infiltration. Foam Core or building board are common examples. This type of covering should NOT be removed. If there is any doubt concerning which material should be removed, the factory that constructed the home should be contacted.

VINYL LAP SIDING

If the end walls of your home were designed for vinyl lap siding, All or part of the siding has been shipped loose. This allows the siding to be applied after the home has been set, eliminating the vertical seam at the center line of the home.

Use the following instructions to complete the installation of vinyl lap siding.

- Remove the plastic temporary covering to expose the sheathing.

!!! CAUTION !!!

Failure to remove plastic temporary shipping material will result in excess moisture being trapped inside the walls and cause premature wall failure.

- Use 16 gage corrosion resistant staples or 8d corrosion resistant nails to fasten siding. Each fastener must be long enough to penetrate 3/4" into the holding member. Nails must have a min. 5/16" diameter head.
- Fasten siding at all stud locations as shown in illustration 14. Fasteners must **not** be driven tight. This will allow the siding to move freely. Fasteners must be located minimum 1/4" from the end of the slot.
- An exterior grade silicone type caulk may be used around the top and bottom corner of windows and doors and where channels adjoin windows as an additional precaution. DO NOT caulk in J-channels and corner post pockets or at seam areas.
- For best appearance, stagger laps a minimum of 3' so that no splice occurs directly above another unless separated by at least 3 courses. Never overlap panels above a door or window.
- Cut all panels approx. 1/4" short of all stops such as corner posts and J-channels to allow for expansion.

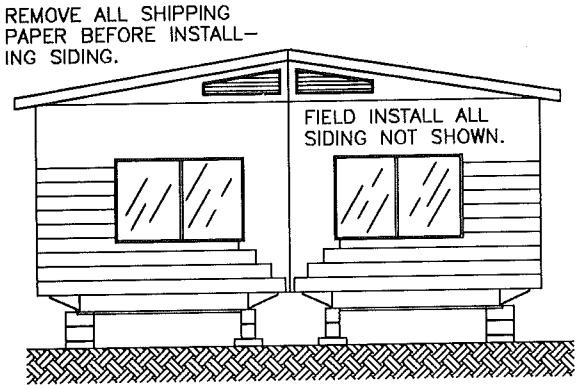

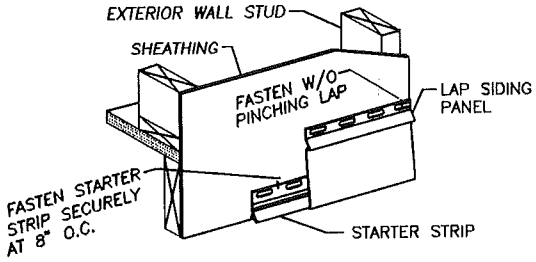

STARTER DETAIL

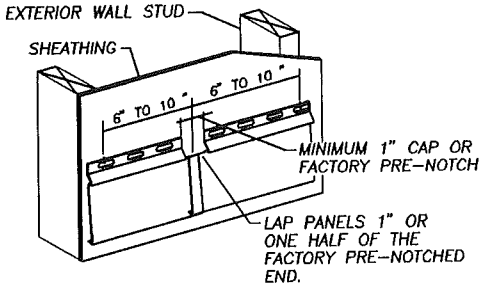

PANEL JOINT CONNECTION DETAIL

Vinyl lap siding installation details
Illustration 14

- In order to fit siding around doors and windows, cut siding panels as shown in illustration 14a to fit in J channel (installed at the factory). Be sure to perf the cut edges of siding with a snap lock punch to insure proper connection where the siding slides under the J-channel. Also, as the panels are being installed, make certain the diverter is properly positioned, as shown in illustration 14a, to channel moisture from behind the siding. Long term exposure of the sheathing to moisture will eventually damage the sheathing.

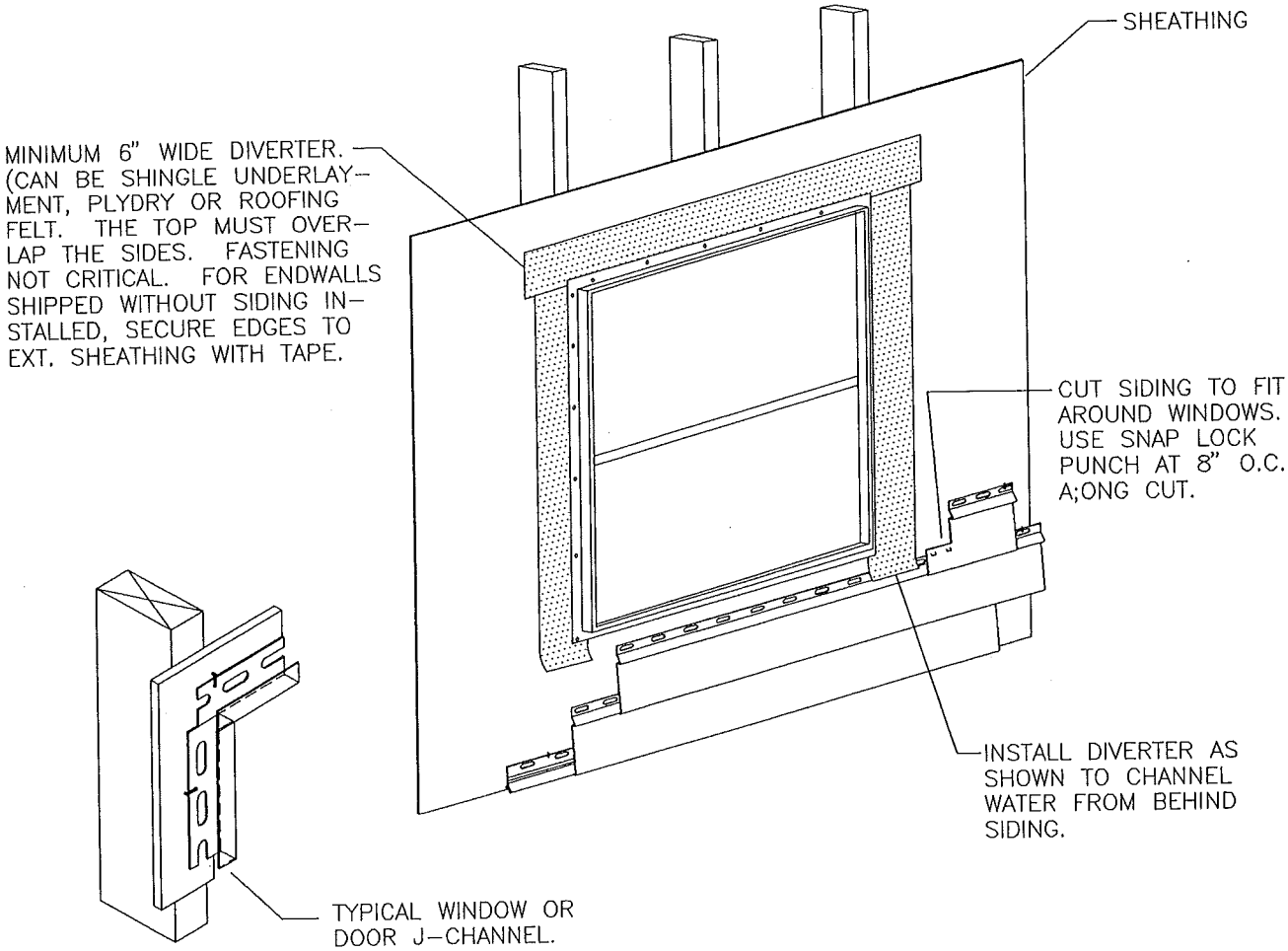

Window/door trim detail
Illustration 14a

- For shutter installation, or windows closer than six feet to the end of the wall, refer to illustration 14b below for special installation requirements.

To install top lap, fasten the finish trim at the top of the wall at 8" on center as shown in illustration 14c. Angle cut the siding to fit under the trim and punch along the cut edge using a snap lock punch. Slide the siding under the finish trim and snap into place.

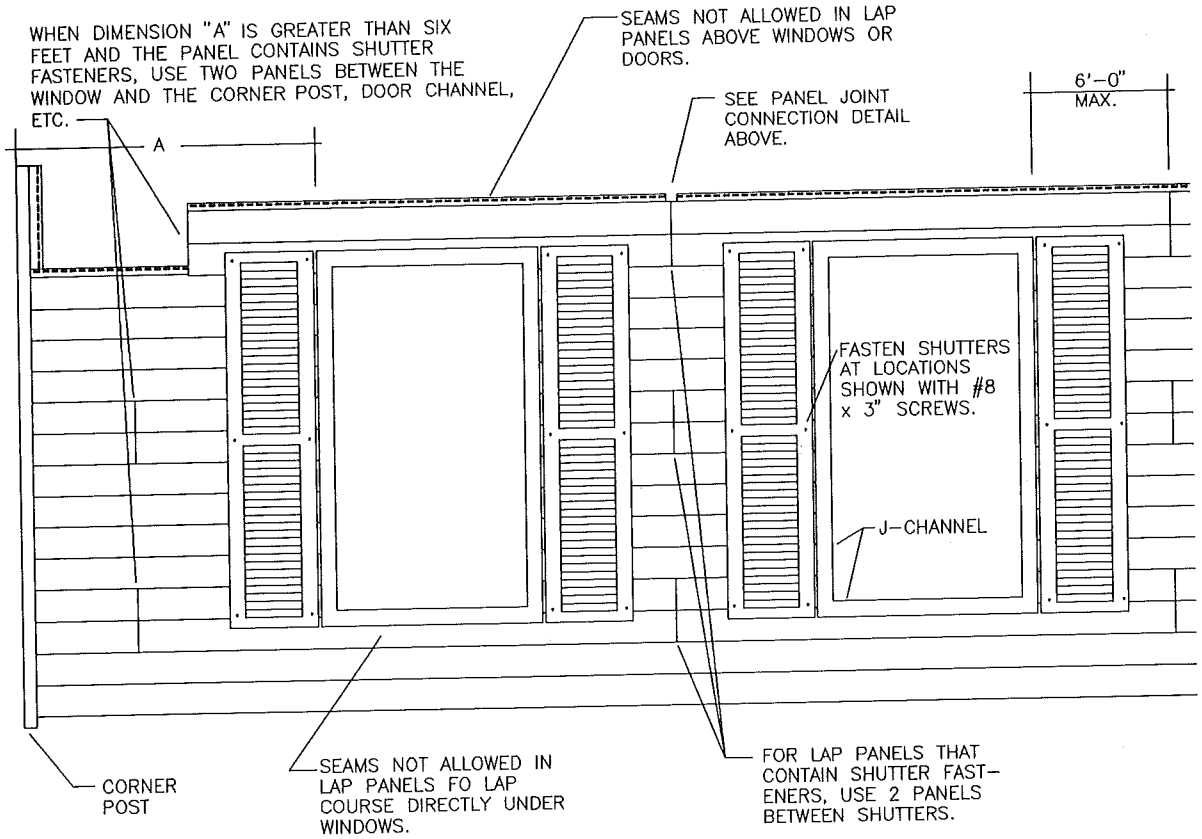

Shutter installation details
Illustration 14b

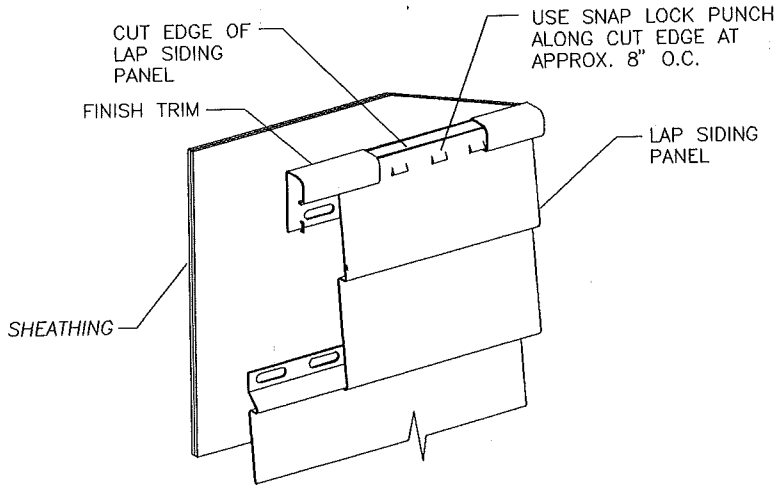

Finish trim installation details
Illustration 14c

VERTICAL PLYWOOD OR HARDBOARD SIDING

Homes having endwalls with vertical plywood or fiberboard siding will have a portion of the siding shipped loose to be installed during setup. This eliminates a seam at the marriage line. Follow the instructions below to finish the installation.

- A 1/8" gap must be provided between vertical edges whenever the close-up panels are installed.
- All saw cut edges must be sealed to prevent moisture from entering the panel.
- Fasten each panel with 8d corrosion resistant nails. Install fasteners at 6" o.c. at the edges and 12" o.c. along intermediate studs. The heads of the nails must be set flush with the surface of the panels.If a nail head breaks the siding surface, the penetration must be sealed with caulking. This will prevent long term exposure to moisture on the interior of the siding and increase the life expectancy of the siding.

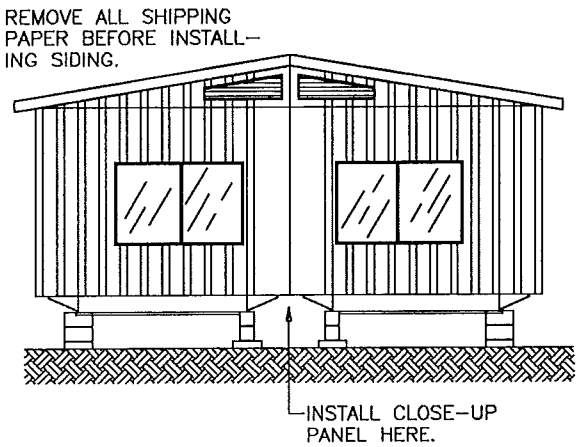

Vertical siding application details
Illustration 15

LOG SIDING

If the end walls of your home were designed for log siding, All or part of the siding has been shipped loose. This allows the siding to be applied after the home has been set, eliminating the vertical seam at the center line of the home. The necessary building paper, window trim and corner posts should already be installed. Use the following the instructions to properly complete the siding installation.

- Position and fasten log siding as shown in illustration 16 beginning at the bottom of the wall. Fasten with 12d corrosion resistant box nails at each stud location.

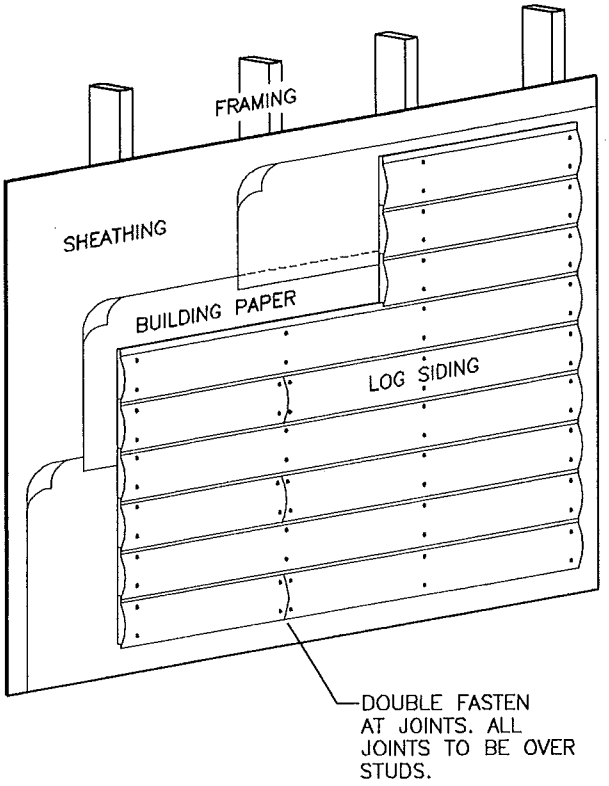

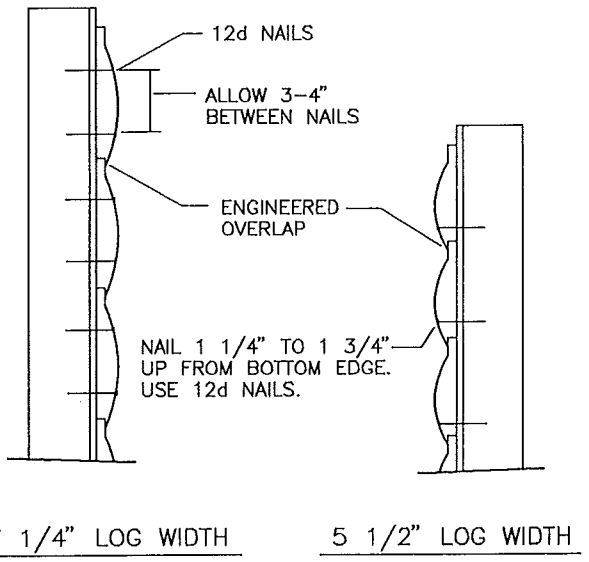

Log siding application details
Illustration 16

HORIZONTAL HARDBOARD LAP SIDING

If the end walls of your home were designed for horizontal hardboard lap siding, All or part of the siding has been shipped loose. This allows the siding to be applied after the home has been set, eliminating the vertical seam at the center line of the home. The necessary building paper, window trim and corner posts should already be installed. Use the following the instructions to properly complete the siding installation.

- Position and fasten lap siding, as shown in illustration 17, beginning at the bottom of the wall. Fasten with 8d corrosion resistant nails at each stud location. The heads of the nails must be set flush with the surface of the panels.If a nail head breaks the siding surface, the penetration must be sealed with caulking. This will prevent long term exposure to moisture on the interior of the siding and reduce the incidence of premature siding failure.
- All saw cut edges must be sealed to prevent moisture from entering the panel.

BOTTOM CLOSURE PATCHING

If the closure material is asphalt base or composition material, it should be repaired by applying a patch of the same or similar material over the damaged area.

Place beads of adhesive or sealant under all contact edges to ensure an airtight seal.

Press the patch firmly into place with your hand or other object and use fasteners and tape to hold it in place until the adhesive sets.

Be sure no gaps exist that could permit air or water to enter.

It is recommended that fasteners be a type designed to spread and hold in soft material. If these fasteners are not available, a patch may be cut large enough to span the floor joist. Add blocking between the joists so that the fasteners used to secure the patch will penetrate wood on all edges.

If the covering is a vinyl coated material, use vinyl patching tape especially designed to repair tears or holes. Pull torn edges together; then cover as necessary with tape or apply a patch of the same material taped on all four sides.

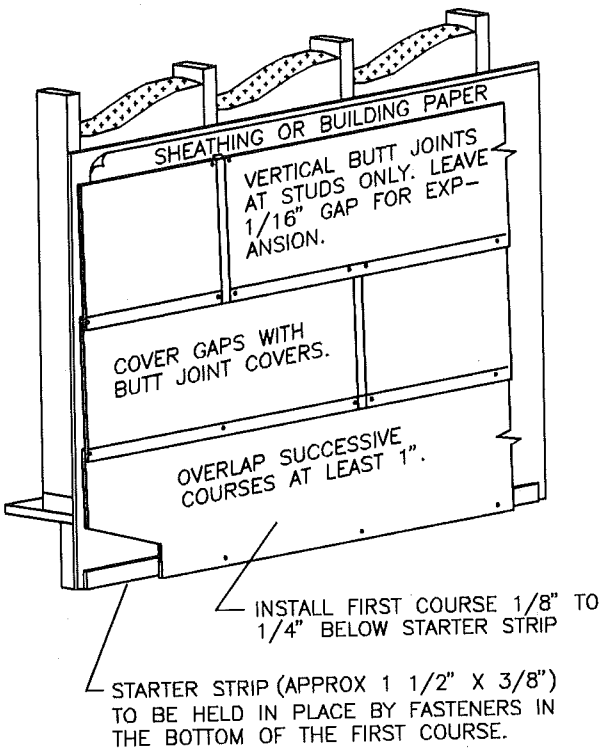

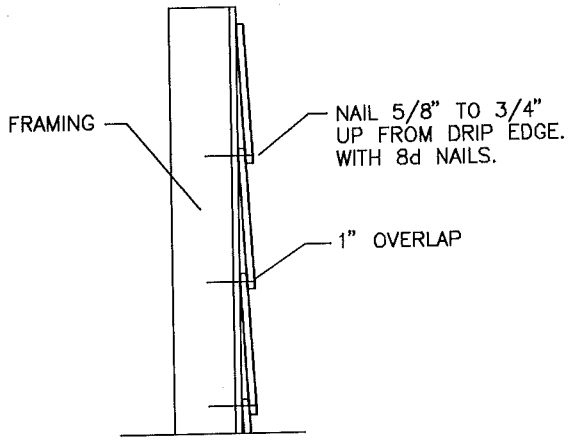

Horizontal hardboard application details
Illustration 17

UNDERCARRIAGE PROTECTION

Any areas of the metal undercarriage of your home which become exposed to corrosion should be repainted or touched up.

ANCHORING SYSTEM

All homes should be securely anchored to resist the uplift and sliding forces created by strong winds. Most areas of the country (all states along the Atlantic and Gulf coasts) require that the home be secured with ground anchors and tiedown straps. Your home has been designed and constructed to withstand these wind loads when anchored with frame ties only. The tiedown straps and ground anchors are not provided by the manufacturer as differing soil conditions require different anchoring systems. Several good systems are available through your dealer or installation contractor.

The strap to frame attachment details are shown in Illustration 18 and the required frame tiedown spacing is shown in Illustration 19 and 20. The strap to anchor connection and the anchor installation method must be in accordance with the anchor manufacturer's installation instructions.

Anchoring equipment shall be capable of resisting a minimum allowable working load of 3150 lbs. and shall be capable of withstanding a 50% overload (4725 lbs.) without failure of either the anchoring equipment or the attachment point on the home.

Vertical straps may have been installed on this house. If so, it should be noted that the vertical straps are provided to supplement and not replace the engineered anchoring system. Under no circumstances should the diagonal anchoring straps be replaced by vertical straps.

The following procedure should be used for installing the anchor system:

1. Thread straps through the buckle and around the I-beam at the proper locations. (See Illustrations 18, 19 and 20.)
2. Install ground anchors per the anchor manufacturer's instructions. Each anchor must be positioned so the final angle between the strap and the side of the home will be not less than 40 nor more than 60°.
3. If the terrain, I-beam location or pier height will not permit strap installation as described above, the following requirements apply:
   -for angles less than 40°, install a second strap from the ground anchor to the I-beam on the opposite side of the section being secured.
   -for angles exceeding 60°, move the anchor closer to the beam thus reducing the angle.
4. Attach the straps to the ground anchor tensioning device as per the anchor manufacturer's instructions. It is recommended that all straps be tightened only enough to remove the slack. Then, after all straps are installed in this manner, retighten each strap.
5. The strap tension should be rechecked periodically until pier settlement has stopped. **The house must not be releveled without first loosening the tie down straps.** After releveling, all straps must be retightened.

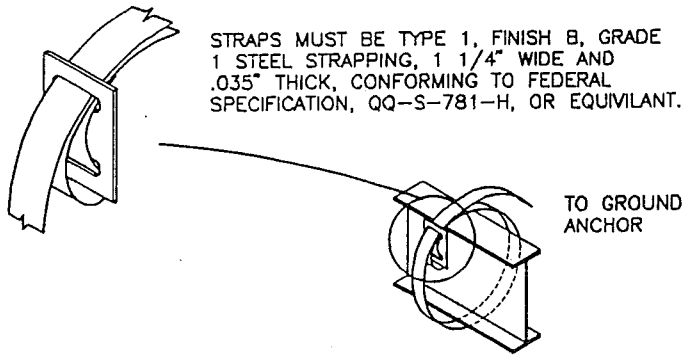

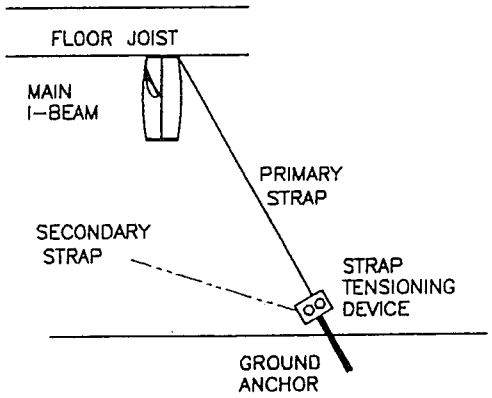

Tiedown strap details
Illustration 18

STATE OF TEXAS
JERALD W. KUNKEL
49961
REGISTERED PROFESSIONAL ENGINEER

6·93

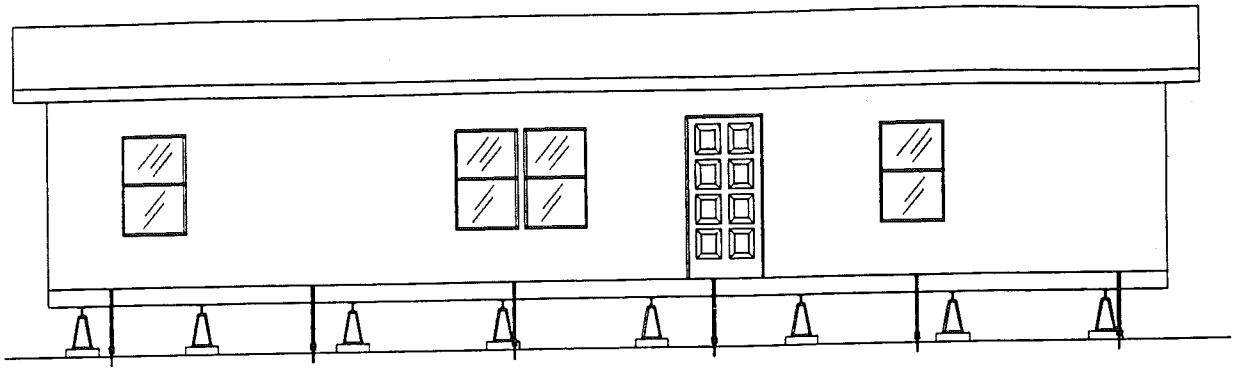

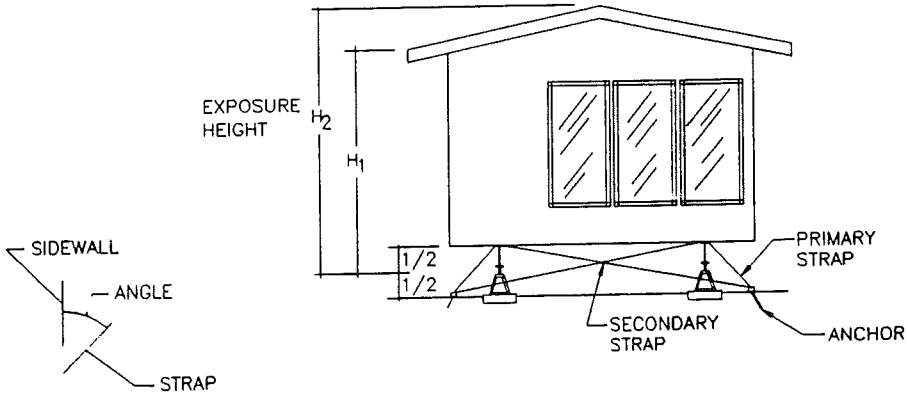

If the angle between the primary strap and the side wall exceeds 60°, move the anchor closer to the I–beam.
If the angle between the primary strap and the side wall is less than 40°, the secondary strap must be used.

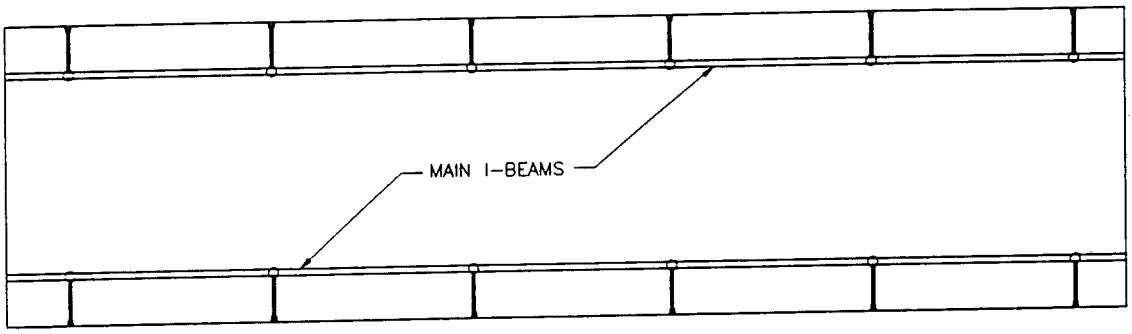

The maximum distance from the end of the house and the first anchor shall not exceed the smaller of 1/2 the maximum distance to the next anchor or ~~48"~~ 24"

Ground Anchor and Strap Spacing Table

(MAXIMUM DISTANCE BETWEEN STRAPS)

EXPOSURE HEIGHT ⇨	9'–0"	10'–0"	11'–0"	12'–0"	13'–0"	14'–0"	15'–0"
15 PSF WIND LOAD ⇨	11'–9"	10'–7"	9'–7"	8'–9"	8'–0"	6'–10"	5'–11"
~~25 PSF WIND LOAD ⇨~~	~~6'–8"~~	~~6'–0"~~	~~5'–3"~~	~~4'–6"~~	~~3'–11"~~	~~3'–5"~~	~~3'–0"~~

When determining anchor and strap spacing:
–Use exposure height H_1 if the roof pitch is 20° or less.
–Use exposure height H_2 if the roof pitch is greater than 20°

Single section tiedown instructions
Illustration 19

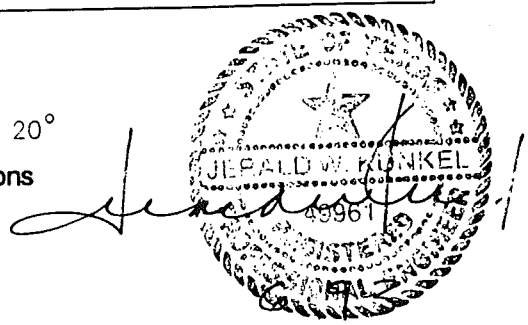

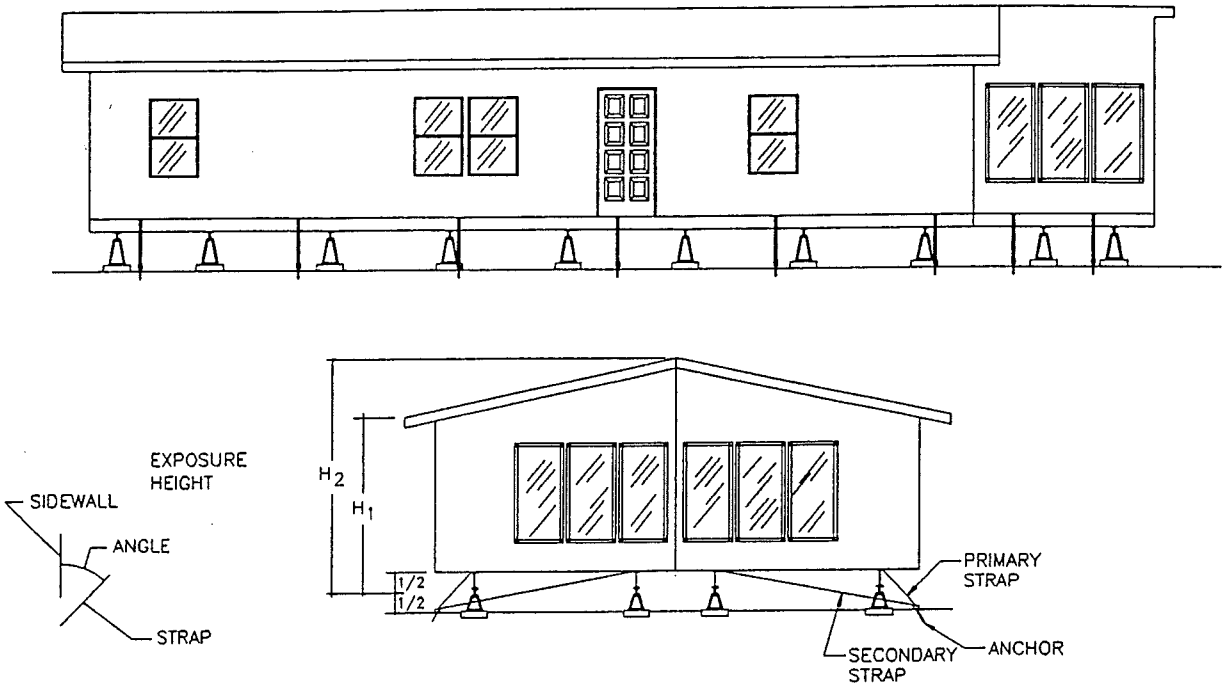

If the angle between the primary strap and the side wall exceeds 60°, move the anchor closer to the I–beam.

If the angle between the primary strap and the side wall is less than 40°, the secondary strap must be used.

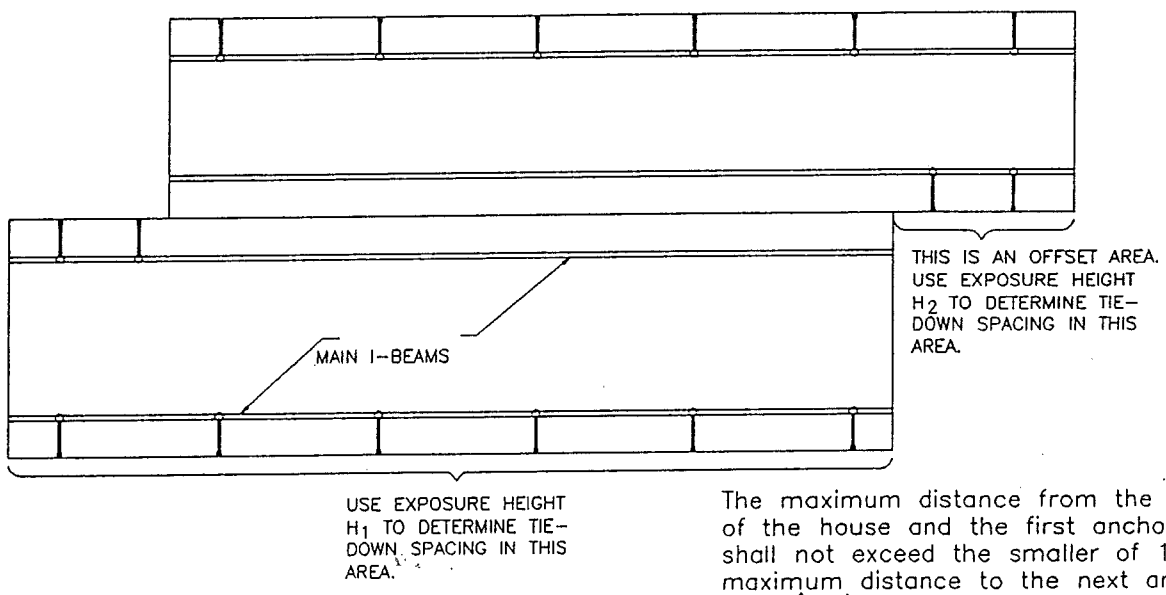

The maximum distance from the end of the house and the first anchor shall not exceed the smaller of 1/2 the maximum distance to the next anchor or ~~48~~ 24"

Ground Anchor and Strap Spacing Table

(MAXIMUM DISTANCE BETWEEN STRAPS)

EXPOSURE HEIGHT ⇨	9'–0"	10'–0"	11'–0"	12'–0"	13'–0"	14'–0"	15'–0"	16'–0"
15 PSF WIND ZONE ⇨	12'–1"	10'–10"	9'–10"	9'–0"	8'–3"	7'–8"	7'–1"	6'–8"
~~25 PSF WIND LOAD ⇨~~	~~6'–6"~~	~~5'–11"~~	~~5'–5"~~	~~5'–0"~~	~~4'–7"~~	~~4'–3"~~	~~4'–0"~~	~~3'–9"~~

When determining strap spacing:

–Use exposure height H_1 if the roof pitch is 20° or less and the wall is not in an offset area.

–Use exposure height H_2 if the roof pitch is greater than 20° or the wall section is in an offset area.

Multi section tiedown instructions

Illustration 20

JERALD W. KUNKEL 49961 PROFESSIONAL ENGINEER

END ANCHORING

In addition to the anchors installed along the side of the home, anchors are sometimes required at the ends of the home. Refer to the End Anchoring Table below to determine if end anchors are required on this installation. If they are required, install the strap and anchor as shown in illustration 20a and use the End anchor placement detail to determine the proper location for anchors.

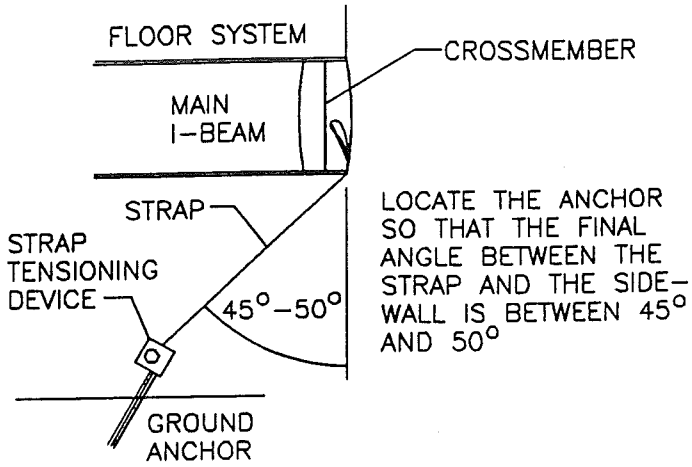

End anchor installation detail
illustration 20a

END ANCHORING TABLE						
15 PSF WIND LOAD	HOMES WITH AVERAGE LENGTHS OF 45 FEET OR LONGER REQUIRE NO END ANCHORS. HOMES WITH AVERAGE LENGTHS LESS THAN 45 FEET REQUIRE TWO ANCHORS AT EACH END INSTALLED AS SHOWN ABOVE.					
25 PSF WIND LOAD		36'	40'	48'	52'	AVERAGE LENGTH OF HOME
TOTAL WIDTH OF HOME IN FEET	12	2	2	2	2	NUMBER OF ANCHORS REQUIRED EACH END OF HOME.
	14	2	2	2	2	
	16	2	2	2	2	
	24	4	2	2	2	
	26	4	2	2	2	
	28	4	4	2	2	
	34	4	4	4	2	
	36	4	4	4	2	
	38	4	4	4	2	

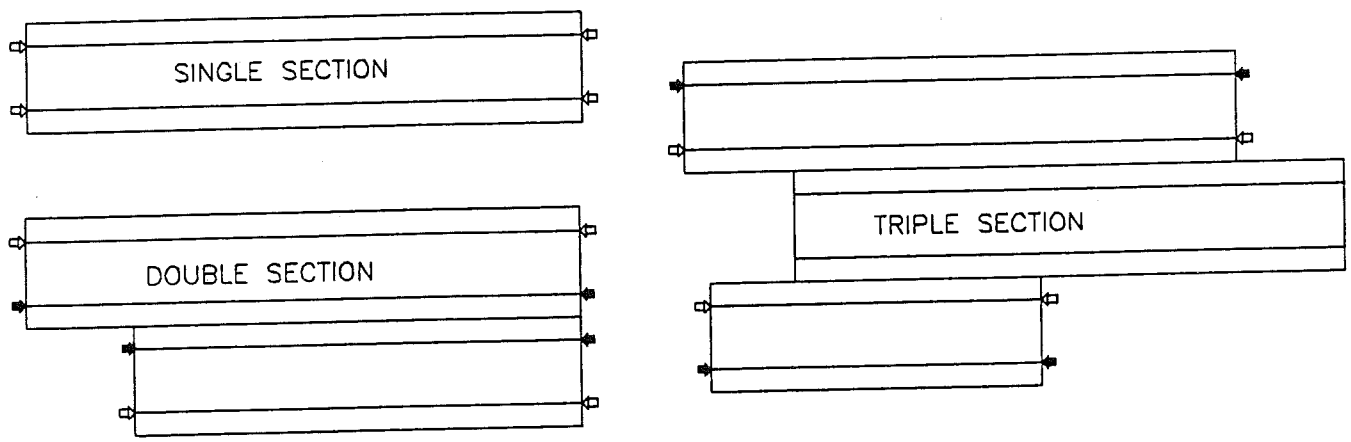

⇨ PROPER LOCATION WHEN TWO ANCHORS REQUIRED.
➡ PROPER LOCATION OF ADDITIONAL ANCHORS WHEN 4 ANCHORS ARE REQUIRED.

End anchor placement detail
illustration 20b

STATE OF TEXAS
JERALD W. KUNKEL
49961
REGISTERED PROFESSIONAL ENGINEER

INTERIOR FINISH

WALL JOINTS

The interior walls of your home may be paneling, vinyl covered gypsum, painted textured gypsum or a combination of the three. Each of these materials must be properly finished off where joints occur after the sections have been properly positioned and fastened together.

!!! NOTICE !!!

Before finishing the walls, all gaps in exterior walls must be filled with fiber glass to prevent air infiltration.

If the interior walls of your home are paneling or vinyl covered gypsum, various types and colors of moldings have been shipped with the home for site installation. After filling all gaps in exterior walls with fiber glass insulation, install the molding using an appropriately sized finish nail or staple. The fastener should hold the molding securely in place but not cause splitting. Molding cutters or a fine toothed saw should be used to cut the material to the required length. A miter box and saw should be used to make angle cuts.

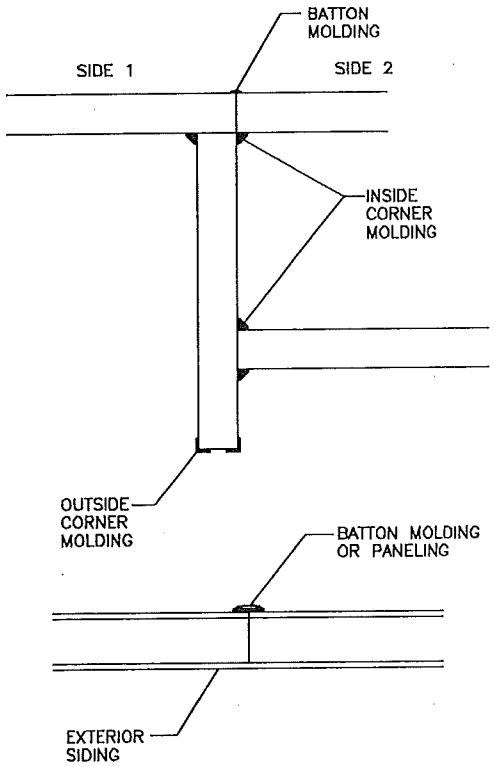

Wall molding details
Illustration 21a

If painted textured gypsum was used on the interior walls, the joints should be finished to match the surrounding surface. This should be accomplished as follows:

- -Apply joint embedding compound along the joint.
- -Wipe off excess embedding compound and center reinforcing tape over the joint. *(Reinforcing tape helps prevent cracks from appearing along gypsum joints.)*
- -Apply additional compound to cover reinforcing tape. Allow the compound to completely dry.
- -Apply a second coat feathered about 2 inches beyond the edges of the first coat.
- -After the second coat is dry, lightly sand and apply a thin finishing coat to the joint.
- -After the finishing coat is dry, lightly sand and apply the appropriate texture.
- -Allow the texture to dry and paint as desired.

!!! WARNING !!!

Wear approved protective respirator when mixing powder or when sanding.

CEILING JOINTS

The ceiling will be a flat or Vaulted textured gypsum and an exposed beam may extend into the living space along the center of the home.

!!! NOTICE !!!

Before finishing the ceiling joints, all gaps between the two sections must be filled with fiber glass to prevent air infiltration.

If no beam is exposed, finish the joint according to the instructions for textured walls.

If the center beam is exposed, the beam may be finished with paneling and molding (see illustration 21b) or gypsum may be installed with the joints and corners finished with compound, tape and a cornerbead at the corners as previously described for wall joints.

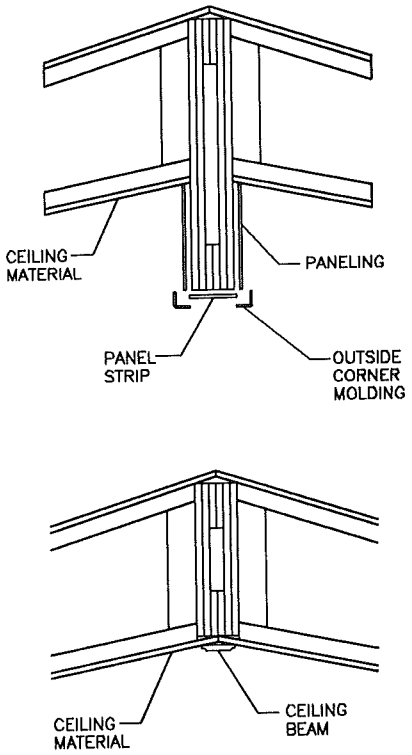

Ceiling trim details
Illustration 21b

CARPET

On some homes, the carpet is shipped inside the home and must be installed after the home is erected. Professional carpet installers should be used. Care must be taken that the "grain" of the carpet always runs in the same direction. Carpet for clothes closets should be taken from the end of the roll or cutouts. All carpet should be cut from the back side. A straight edge should be used to mark the seam to be cut. The cuts should be made at right angle to the back side using a carpet knife or razor. Be sure to match the high and low areas of patterned carpet. All mill edges should be trimmed before joining for seam edges. Carpet seam tape should be used at all seams.

Most carpeting will stretch after a short period of usage. Proper stretching of the carpet at the time of installation will minimize the latent growth. A power stretcher should be used for this purpose.

The carpet pad should be cut to fit each area to be carpeted. The pad should be placed within 1/2" to 1" of the wall. The pad should be secured with small amounts of glue, tile paste, or staples to prevent movement as the carpet is being installed.

UTILITY CONNECTIONS

GENERAL

All utility systems are tested as a normal part of the construction process. Because damage can occur as the home is being transported, it is mandatory that each system be re-tested after the final service connections are made.

To insure that all applicable codes are met, licensed contractors should be engaged to install the utilities to the home and make sure all connections are made correctly.

WATER SYSTEM

The fresh water system of the home has been designed to operate at a maximum pressure of 80 p.s.i. The municipal water pressure must be checked before making this connection. If the pressure is greater than the allowable, a pressure reducing regulator must be installed between the city water line and the home. In addition, a "full-flow" shut off valve (port or ball type) must be installed between the Regulator and the home. The valve is to be used to shut off the fresh water supply to the home and must be accessible from outside the home without having to remove any skirting or crawling beneath the home.

If the home is located in an area where the home is subjected to freezing temperatures, all exposed pipes must be protected from freezing. This can be accomplished by wrapping the exposed pipes with insulation or electric heat tapes. An electrical outlet has been placed underneath the home adjacent to the water inlet pipe for this purpose. Only heat tapes designed for use in mobile homes should be used.

If the home is designed with plumbing systems on both halves of the home, crossover connections will have to be made. The Set-Up Kit will contain two flex lines approved for use with water systems. The flex lines are to be connected to the pipes extending through the bottom covering close to the center line of the home as shown in Illustration 22. The hot water lines are identified with red paint.

The water lines of some models are constructed with polybutylene plumbing pipe. When this material is used, a sufficient length of pipe is provided to allow the crossover connection to be made without the need of extra flex lines. Couplers and flare nuts are provided and are to be connected in the normal manner. The exposed pipe used for the crossover (either type) must be wrapped with insulation or heat tape to prevent freezing.

If the home is to be left without heat in a cold climate, the water lines must be cleared to prevent possible freezing and damage to the piping system. This may be accomplished by opening all faucets and applying air pressure to blow out the lines. If the home is equipped for an optional solar hot water heater, the solar collectors shall be field installed per the collector manufacturers installation instructions.

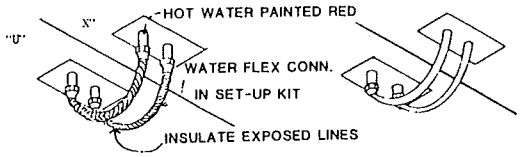

Water line crossover detail
Illustration 22

WATER SYSTEM TEST PROCEDURE

The water piping system should be tested with air pressure or water. **The water heater tank must be disconnected from the system if air pressure is used!!!**

The recommended test procedure is as follows:

1. Attach the pressure source and gauge to the inlet pipe of the home. **(Disconnect water heater tank if air pressure is used!)**
2. Pressurize the system to 100 p.s.i. and then isolate the pressure source.
3. The system must hold the pressure for 15 min. without loss.
4. If pressure loss is noted, the leaks must be located and repairs made. Use a soap solution to locate leaks when testing with air and visually inspect when testing with water.
5. Repeat procedure until required pressure and time requirements are met.

DRAINAGE SYSTEM

The sanitary drain lines of the home have been designed to discharge from a single point into the municipal sewer or septic tank feeder line. In most models, all of the plumbing has been assembled, and only the connection from the 3" discharge to the sewer service line must be made.

If plumbing facilities are located on both halves of the home, then a crossover line must

be installed. A flexible neoprene or ABS coupler is provided in the Set-Up Kit for this purpose. (See Illustration 23)

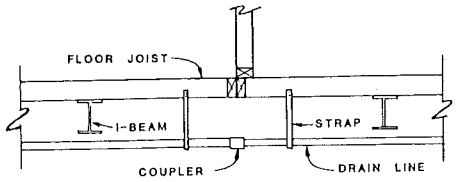

Drain line crossover detail
Illustration 23

Due to the location of the bathrooms on some models, it is not possible to assemble the drain line inside the floor cavity. On these models a portion of the drain line must be installed during set-up.

When site assembly is required, all pipe and fittings must be installed according to the RADCO approved drain line schematic specifically designed for this home and provided with the Setup Manual. All materials needed to complete this installation are included with the ship loose parts supplied in the home.

The following instructions must be followed in completing the drain lines:

Check all piping and stub-outs to insure that the ends are clean and free of burrs. All solvent welded connections should be made according to the instructions provided by the manufacturer of the cement. All pipe shall be inserted the full depth of the socket fitting. Assembly of the field installed portion of the DWV system should begin at the most remote end and work toward the outlet.

All cleanouts shall be accessible with a minimum unobstructed clearance of 12 inches directly in front of the opening. Each cleanout fitting shall open in a direction opposite the flow or at right angles to the pipe.

The grade of the drain line must be at least 1/4" of fall for each 12" of run unless otherwise noted on the DWV schematic included with this manual. When the assembly is complete, the permanent drain line supports shall be installed at maximum 48" o.c. See Illustration 24 for suggested methods of drain line support installation.

The completed DWV system shall be subjected to a flood level test as required by section 3280.612(b)(3) of the Federal Manufactured Home Standards as follows: "The home shall be in a level position, all fixtures shall be connected, and the entire system shall be filled with water to the rim of the toilet bowl. (Tub and shower drains shall be plugged.) After all trapped air has been released, the test shall be sustained for not less than 15 minutes without evidence of leaks. Then the system shall be unplugged and emptied. The waste piping above the level of the toilet bowl shall then be tested and show no indication of leakage when the high fixtures are filled with water and emptied simultaneously to obtain the maximum possible flow in the drain piping."

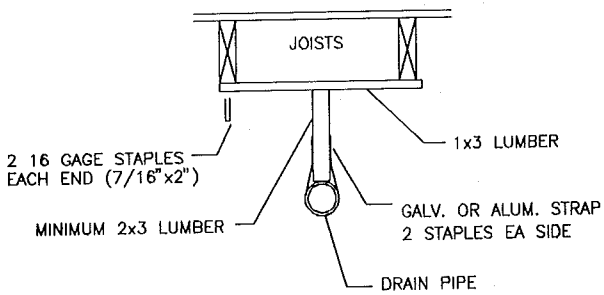

Typical outside drain assembly
Illustration 24

GAS SYSTEM
Connections

The gas piping system for homes equipped with gas burning appliances are designed to operate at pressures not to exceed a 14 inch water column (1/2 p.s.i.) and not less than a 7 inch water column (1/4 p.s.i.) A pressure regulator capable of maintaining these allowable pressures must be installed in the event the municipal pressure is greater than the allowable.

If the home is constructed with gas appliances on both sides of the home, it will be necessary to install the gas crossover flex line before the piping system is connected to the supply line. An AGA approved gas flex line equipped with a "Quick-Disconnect" coupler has been provided in the Set-Up Kit, if required. The direction of gas flow is noted on the coupler. It is essential that these directions be followed: (See Illustration 25)

!!! NOTE !!!

-Inlet and crossover connections should be made by an authorized or licensed gas serviceman.

-Each fitting and appliance should be checked for gas leakage by qualified service personnel after all connections have been made. (See Gas Test Procedures)

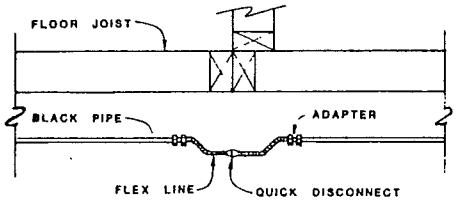

Gas line quick disconnect
Illustration 25

!!! CAUTION !!!

- **Check all gas appliances to insure they are setup for the type of gas being supplied (ie Natural or Liquid Petroleum Gas).**
- **Conversions, when necessary, must be made by qualified personnel.**
- **All conversions must be made in accordance with the instructions provided by the appliance manufacturer.**

Gas System Test Procedure

The gas piping system should be retested before the system is placed in service. It is essential that qualified personnel perform this test in order to insure safe operation of all gas appliances. Many gas utility companies (and often will conduct this test) that the system be pressure tested before connecting to the gas meter.

The recommended test procedure is as follows:

!!! CAUTION !!!

-Do not apply pressures greater than 0.5 p.s.i.

-Do not use soap solutions containing ammonia on brass fittings.

1. Open the shut off valve to each appliance.
2. Apply a pressure of 0.25 to 0.50 p.s.i. Use a pressure gage calibrated in 0.1 psi increments to measure pressure.
3. Apply a soap solution to all fittings and flexible connectors while visually inspecting for leaks.
4. Eliminate any leaks that are found and continue testing until all fittings and connectors pass.

HEATING SYSTEM

There are three basic types of downflow forced air heating systems used in the construction of Fuqua Homes. Each system requires the installation of one or two insulated flexible ducts during set-up.

The appropriate number and size of ducts are provided with the home. If additional flex-duct is required, it must have a minimum R-4 insulation value and a continuous vapor barrier with a perm rating not more than 1 perm. Collars, on which the flex-ducts are to be connected, have been properly placed to the underside of the primary ducts at the time of construction. The flex-ducts are to be installed by first removing the protective tape covering the collars, then placing the "screw-clamps" over the connecting flanges. The screws should be sufficiently tight to prevent air leakage but not to the point of "buckling" the collar. Illustration 20 shows the three systems requiring this procedure.

Exterior crossover ducts must be securely strapped to a floor joist or chassis member at maximum 48" O.C. A minimum 4 inch ground clearance must be maintained. In order to maintain the proper ground clearance, the circular flex duct may be compressed to an 8" oval. It may also be supported by concrete blocks or pressure treated pads. See Illustration 26.

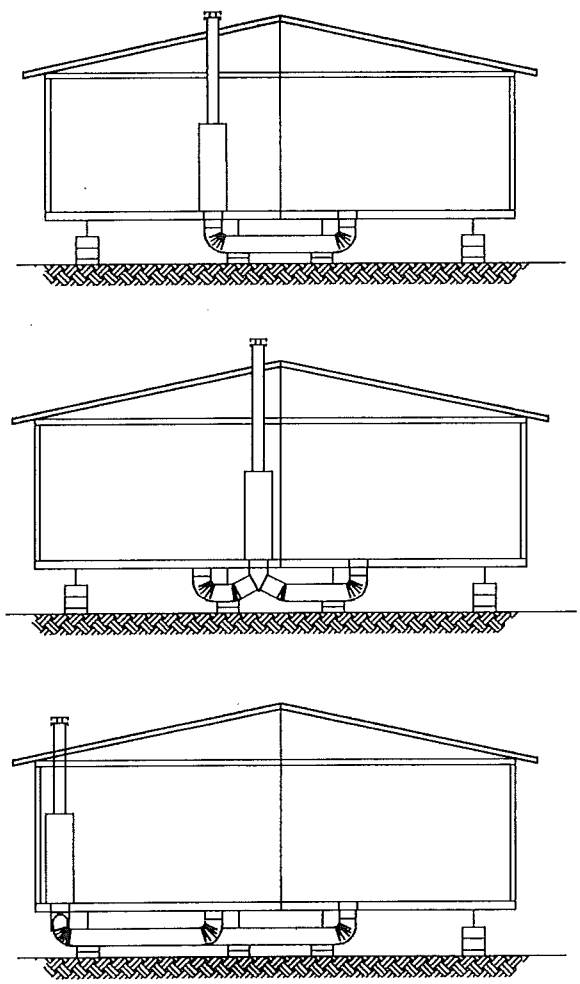

Heat duct crossover systems
Illustration 26

ELECTRICAL SYSTEM

Power supply

The electrical system of your home is designed to be connected to a 120/240 volt power supply rated between 100 and 200 amperes. The conductors connecting the electrical distribution panel (breaker box) and the service equipment (meter base and/or breakers) are called feeders.

An adequately sized power supply at the meter **must** be available at the site. A power supply that is too small may result in premature equipment failure and/or nuisance tripping of the breakers. The proper rating for the power supply can be located on the breaker box and on a tag located outside by the feeder or service entrance.

Feeder wire and junction box

In order to select the proper size feeder wire and junction box, determine the correct size power supply as described above and refer to the Electrical feeder and Junction Box Size Table below. These values are based on an ambient temperature of 86° F and do not take voltage drop into consideration. Four insulated feeder conductors are required, one of which must be a grounding conductor. The feeder conductors may extend upward and feed through a mast or weatherhead or they may extend down and connect through a junction box selected from Electrical Feeder and Junction Box Table shown below.

If a masthead is used, it may be located above or below the roof overhang. If it extends above the roof, allow a minimum of 8 feet clearance above all points where the conductors pass over the roof. There are two exceptions to this rule. 1) If the roof has a minimum slope of 4 in 12 or greater, the vertical clearance may be reduced to 3 feet. 2.) If no more than 4 feet of service-drop conductor pass above the roof overhang and the conductors terminate at an approved support, the vertical clearance may be reduced to 18 inches.

A minimum clearance is also required between the final grade and the service conductors. This dimension varies from 10 to 18 feet depending on the type of traffic anticipated below the service drop. (See the National Electric Code for additional information.) Whenever practical locate the service head above the point of attachment of the service-drop conductors and make them raintight.

If a raceway extends from the distribution panel to the underside of the home, an approved junction box or fitting must be used to connect to the supply raceway. The junction box or fitting and the feeder conductors are to be supplied by the installer or owner. Install the properly sized conductors from the distribution panel to the service entrance. All conductors must be buried to meet minimum burial requirements outlined in the National Electric Code. Conductors emerging from the ground must be protected to a minimum depth of 18 inches and at least 8 feet above the ground or to the point of entrance into the home.

Grounding

All feeder connected homes must be properly grounded through the grounding bar in the distribution panel. **The neutral bar shall not be grounded.** This safety requirement will help protect the occupants from electrical shock. The grounding shall be accomplished by attaching the feeder ground wire to the grounding terminal in the distribution panel and to a suitable ground at the service entrance (meter base). If the meter base is located on the home, a grounding conductor, (continuous length of #4 copper minimum) must be connected to an approved grounding electrode. The grounding electrode should be an 8' length of 1/2" diameter copper rod or 3/4" diameter galvanized steel pipe. The electrode shall be driven into the ground at least 12" below the surface and 2' away from the foundation or buried horizontally at least 30" below the surface. The grounding conductor must then be connected to the grounding electrode with a grounding clamp and cover.

Electrical Feeder and Junction Box Size Table

FEEDER AND MAIN BREAKER SIZE	MINIMUM SIZES		FEEDER WIRE TYPES (AWG) AND SIZES (AWG) RH – RHH – RHW – TWH – THWN – THHN – XHHN					
	JUNCTION BOX (INCHES)	CONDUIT SIZE (INCHES)	CONDUCTORS RED OR BLACK COPPER	ALUMINUM	NEUTRAL WHITE COPPER	ALUMINUM	GROUNDING BARE OR GREEN COPPER	ALUMINUM
100 AMP	10 X 10 X 4	1 1/4	# 4	# 2	# 4	# 2	# 4	# 2
150 AMP	10 X 12 X 4	1 1/2	# 1	2/0	# 1	2/0	# 1	2/0
200 AMP	12 X 12 X 4	2	2/0	4/0	2/0	4/0	2/0	4/0

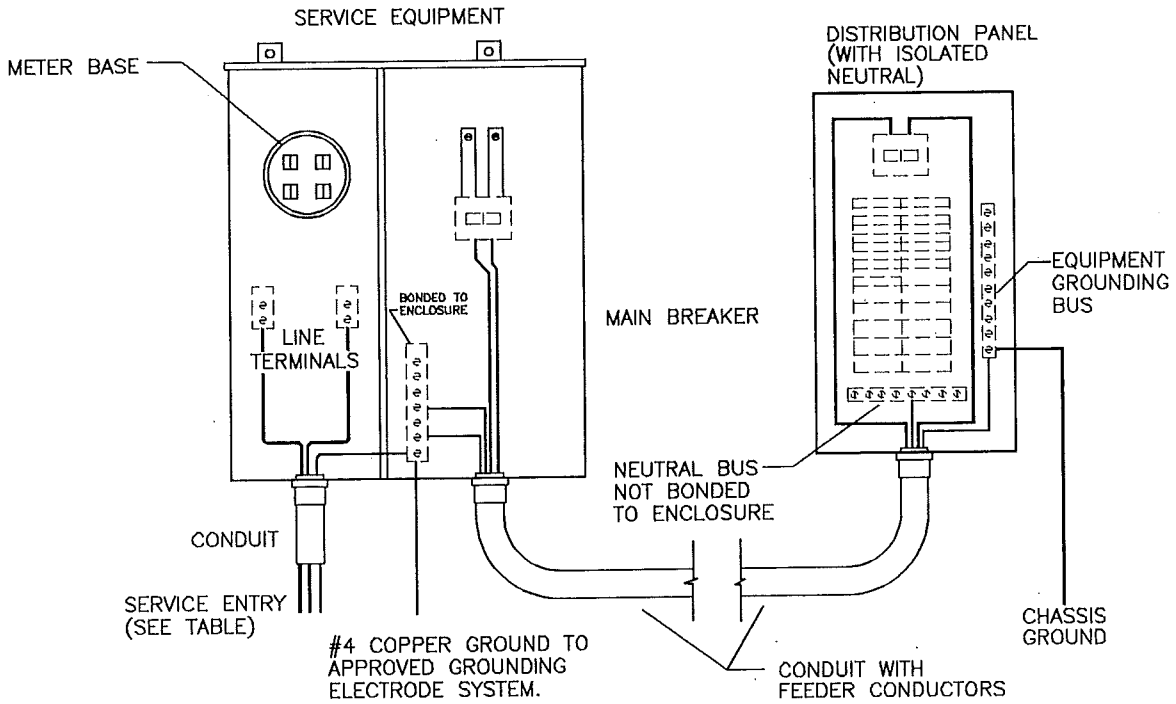

Electrical connection details
Illustration 27

Test Procedures

The electrical tests should be performed only after all interior and exterior trim installations have been made. All electrical tests should be performed by qualified licensed electricians only. Use only approved testing equipment for these tests.

!!! CAUTION !!!

The electric water heater circuit must be turned off or the tank must be filled with water before power is supplied to the distribution panel in order to avoid heating element failure.

The recommended test procedures are as follows:

A. Continuity check:
1- Continuity - 110/220 Volt AC. The grounding continuity test must be performed before the feeder conductors are connected.
2- Connect one clip of a flashlight continuity tester to a convenient ground (galvanized water line, metal skin, etc.) and touch the other clip to each fixture canopy. The continuity light should illuminate if the fixture is properly grounded.
3- Repeat this test for direct wired appliances and fixtures.
4- Any defect noted must be repaired and retested before electric service is connected.

B. Polarity and operational check:
1- (Perform after the electric service has been connected.) The home is to be tested for reversed polarity, open grounds and shorts by plugging a circuit tester in each receptacle in the home.
2- The cause of any defects should be found and repairs made.
3- Install light bulbs in all fixtures and check for proper operation by turning on the appropriate switch.
4- Repair or replace any fixture or switch that fails to function properly.

C. Ground Fault Circuit Interruption check:
1- Make certain that each receptacle requiring GFCI protection is on the correct circuit.
2- Check each ground fault interrupter device by pressing the test button.
3- Replace any GFCI device that does not function properly.

Crossover Connections

The primary junction boxes, in which the crossover connections are to be made, are located at the rear centerline underneath the floor. Due to specific electrical requirements of some floor plan designs, additional crossover junction boxes may be placed along the centerline of the home. Also, any of the four crossover methods shown may have been used. The conductor connection requirements are the same for each method. For specific instructions for completing each type of crossover, see Illustration 28.

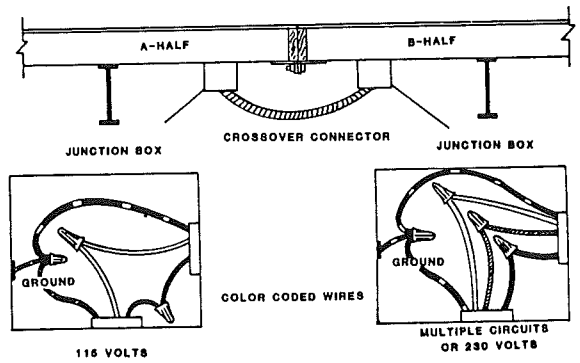

1. Remove the junction box cover on the utility half and install the conduit and conductors provided between the boxes. (See Illustration)
2. Connect color coded conductors using properly sized connectors.
3. The junction box must be provided with an approved grounding clip or lug.
4. Replace and secure junction box covers.

1. Remove inspection panel and junction box cover plate to reveal cables.
2. Insert cables from secondary half into junction box located on the opposite half.
3. Connect the color coded wires with properly sized connectors.
4. If the junction box is metallic, attach ground wire to box with approved grounding clip or lug.
5. Secure all cables to structural members within 12" of the junction box.
6. Replace insulation and reinstall the cover plate and inspection panels.

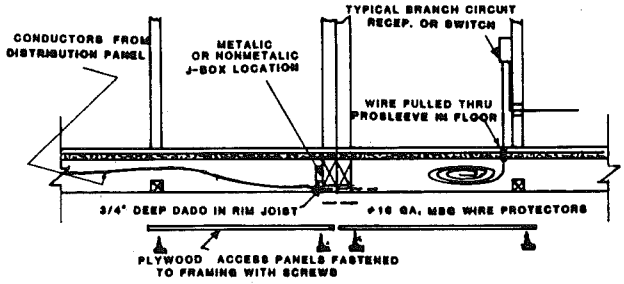

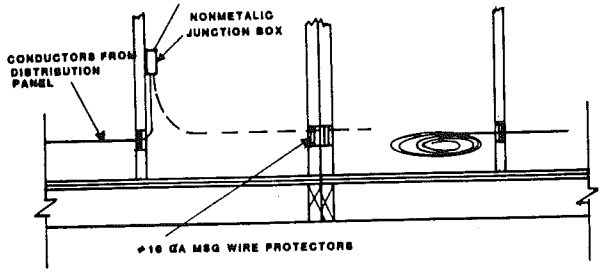

1. Remove exterior wall close-up material.
2. Pull conductors from B-half and thread through junction box in A-half.
3. Move inside house and connect color coded conductors using properly sized connectors.
4. Make sure wire protectors and insulation are in place and replace wall close-up material.

1. If an AMP cable connector is used:
   a. Orient the connectors so the mating ends align with each other as shown.
   b. Slide the connectors into each other until the locking latches engage the locking tabs.
2. Make sure insulation is in place and replace close- up material.

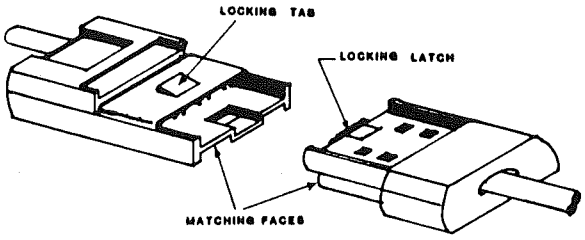

Crossover connection details
Illustration 28

FIREPLACE AND APPLIANCE INSTALLATION

FIREPLACE INSTALLATION

When an optional fireplace is installed, the installation will be complete except for the chimney and combustion air ducts. **Both items must be finished before the fireplace can be used.**

Chimney - Before installing the chimney, remove all weather-protecting materials covering the exhaust stack and view inside of the exhaust chimney and be sure to remove any foreign material before continuing.

All of the parts required to complete the chimney installation have been shipped with the home. Installation instructions for the chimney are provided by the fireplace manufacturer and are placed either inside the fireplace or with the box of parts.

Combustion Air Ducts - The combustion air for the fire chamber must be drawn from outside the home. This serves a dual function of maintaining clean air in the home and preventing cold air from being drawn into the home through openings around windows and doors thus making the fireplace a more efficient heating unit. When this home was built, the combustion air ducts were terminated just beneath the bottom covering of the floor. If the home is installed over a crawl space or basement or skirting is installed after the home is set up, these ducts must be extended to a point outside the enclosed area under the floor of the home. Due to the variety of field conditions encountered, the ducting and connectors are not supplied by the manufacturer, however they may be purchased from your local hardware store. Installation instructions detailing this work are provided by the fireplace manufacturer and are placed either inside the fireplace or with the box of chimney parts.

FURNACE ROOF JACK CROWN ASSEMBLY

The furnace roof jack crown assembly for this home may have been shipped loose in order to comply with transportation requirements. If this is the case, a warning tag will be attached to the fuel supply line, the furnace and the furnace thermostat. The crown assembly **must** be installed before placing the furnace in operation. The roof jack crown assembly and instructions for installation are located inside the home.

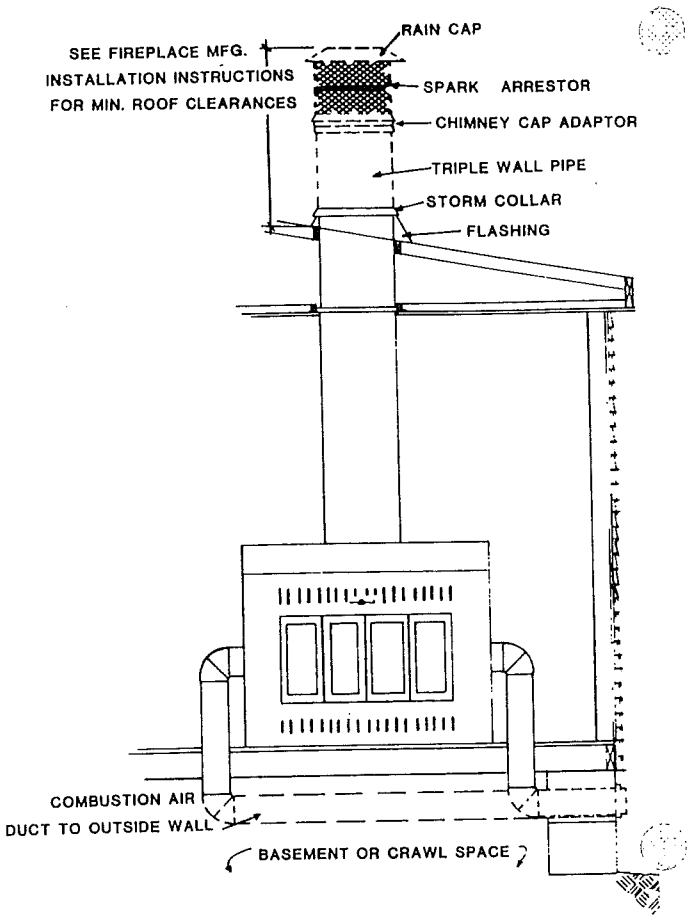

Fireplace installation details
Illustration 29

CLOTHES DRYER EXHAUST VENT

Most homes are designed and constructed to accommodate a clothes dryer. If your home is so designed, an opening has been provided in the exterior wall or through the floor for the installation of the exhaust duct.

To properly complete the construction, the protective shipping covers must first be removed; then follow the instructions provided by the appliance manufacturer. Illustration 30 shows the most common installation procedure.

!!! CAUTION !!!

All moisture-lint exhaust ducts must terminate outside the home to prevent excessive amounts of moisture accumulation under the home or inside the walls, roof or floor.

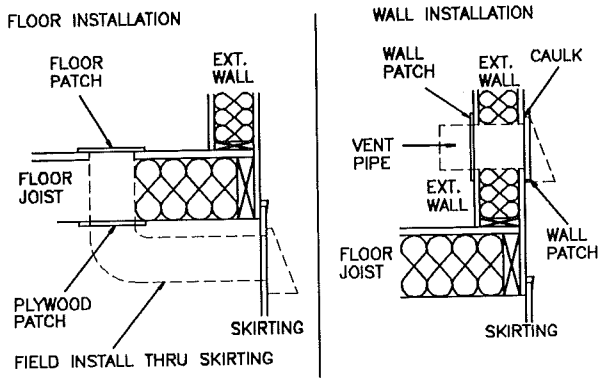

Clothes dryer vent
Illustration 30

SKIRTING

Before the skirting is installed, provisions should be made for proper ventilation. Vent opening should be made for proper ventilation. Vent openings should be spaced every 25 feet around the home. Each opening should be sized to provide a net area of 36 square inches. The grilles or wire mesh covering should be of corrosion resistant material. At least one access panel, min. 18 in. x 24 in., should be installed in the skirting to allow adequate space for access to the under side of the home. Additionally, the area around the home should be properly graded to provide runoff of excess moisture.

Wood, metal, or other common siding materials may be used for skirting. If wood products are used, it is essential that the material be properly treated to prevent deterioration from moisture. If the home is to be located in an area that is known to contain termites or other wood eating insects, then adequate measures must be taken to protect skirting material as well as the underside of the home. Any commercial pest control company can recommend the treatment best suited for your particular locale.

AIR CONDITIONER INSTALLATION

*** * * CAUTION * * ***

All electrical connections made to energize the air conditioning equipment should be made by a licensed electrician. The complete installation must conform to Article 440 of the National Electric Code and applicable local codes.

Branch circuits installed at the factory for the purpose of energizing air conditioning equipment will have a junction box located on the bottom side of the home. A data plate will be placed on the side of the home adjacent to this box, outlining the maximum full load ampere draw for the indicated branch circuit. In installing air conditioning equipment, it must not exceed the indicated circuit rating.

"A" coil air conditioning units installed must be listed for use with the furnace in this home, and the instructions shipped with the air conditioner should be closely followed in making the installation.

When the electrical connection is made via a junction box beneath the home, the field installation wiring beyond the junction box must incorporate a fuse disconnect (size in accordance with NEC Article 440) located within sight of the condensing unit. The maximum fuse size to be used with the fuse disconnect is marked on the condenser data plate.

The acceptability of the air conditioning equipment, the rating, the location of the disconnect, the branch circuit protection, and the connections to the equipment are to be determined by the local inspection authorities.

EVAPORATIVE COOLER

NOTE: **The electrical connection must be made only by qualified personnel.**

On models equipped for installation of optional evaporative cooler, install the roof mounted cooler according to the instructions with the cooler.

Remove the cover from roof mounted junction box and make the connection of the color coded wires using properly sized connectors. (See Illustration 30).

NOTE: **Coolers rated between 12 and 16 Amps to be installed on 20 Amp circuit. Coolers rated at 12 Amps or less are to be installed on 15 Amp circuit.**

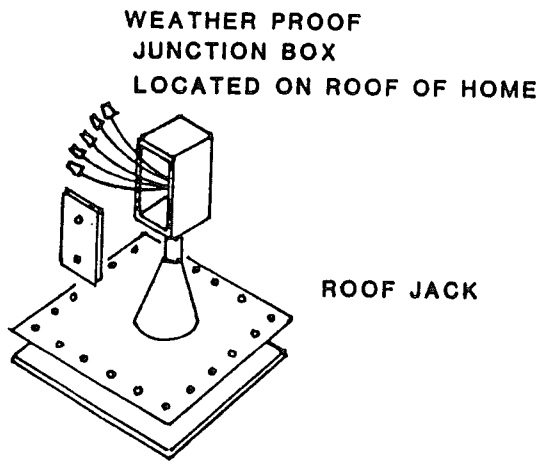

Evaporative cooler connection
Illustration 31

EXTERIOR LIGHT CONNECTION

Remove Junction Box cover. Make color coded wire-to-wire connections using wire nuts appropriately sized for connection. (See Illustration 32).

Secure light fixture to Junction Box. Furnish bulb and attach globe.

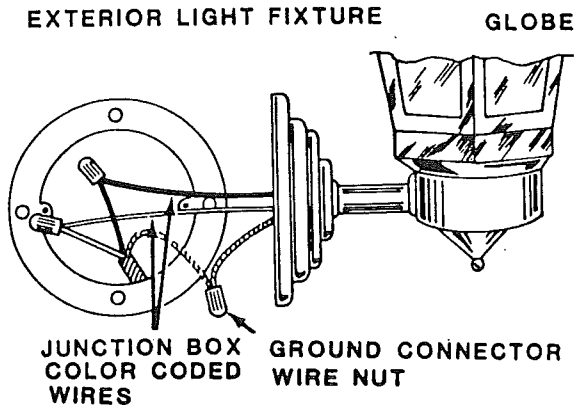

Exterior light connection
Illustration 32

Some fixtures have conductors that are not coded black and white. In this is the case, examine the conductors closely for "tracers", (markings used to distinguish one conductor from another). The conductor that has the "tracer" must be connected to the white conductor.

FINAL INSPECTION

GENERAL

After your Fuqua home has been completely set up, it should be professionally inspected for transit and set-up damage and to insure that nothing has been overlooked which could cause a service problem. Special emphasis should be placed on the following items:

EXTERIOR SIDING & TRIM

A thorough check should be made of all portions of the exterior siding to make certain that it is not cracked, split, buckled, or loose. Any siding observed to be in this condition should be repaired or replaced.

All fasteners that are loose should be retightened or replaced.

All decorative trim pieces or molding strips, including J-rail or molding along the edge of the roof, should be checked to make certain there are no gaps or voids in the sealant tapes or caulking material. If any such places are observed, they should be released.

ROOFS

The roof should be checked to make certain that all flashings are in place and properly attached and sealed.

If you home has a metal roof installed, it should be inspected for any signs of cracks or holes.

In the event your home has a composition roof, the shingles should be checked for proper attachment, making certain that none are loose or have been displaced during transit.

!!! CAUTION !!!

On metal roof applications, the roofs do not have a solid sub roof material. If it is necessary to walk on the roof for repairs or inspections, plywood sheets or boards should be used to distribute your weight over several rafters. If required to step directly on the metal roof, care should be taken to avoid placing your weight directly between rafters. You should always attempt to step directly on top of a rafter. If this is not done, the seams on the metal rood could be damaged.

CLEARANCES

If there are any low-hanging trees or bushes adjacent to your home which could damage the exterior or the roof, they should be trimmed as necessary. Future growth of these bushes or trees should be considered as well as their possible movement during wind conditions or under snow or ice loads.

OPERATIONAL CHECK

Make a complete final check of all components to insure that all are operating properly. This includes all swinging and sliding doors, drawers, windows, electric circuits, appliances, exhaust fans, smoke detectors, ground fault circuit breakers, etc. Check the operation of sinks, bath tubs, shower stalls, washer connections, and all heat registers. Adjustments should be made where necessary.

RELOCATION

THIS HOME SHOULD ONLY BE MOVED BY A PROFESSIONAL MANUFACTURED HOUSE MOVER.

If you find it necessary to move your home, the following items must be checked closely:

* Obtain the roof load, wind load and temperature zone requirements at the new destination. If the requirements are greater than specified on the compliance certificate of your home, the home should not be moved to the new destination as modification costs will most likely be prohibitive. If you are uncertain, a competent manufactured home mover, the dealer or the manufacturer should be contacted to ensure your home meets the new requirements.

* If tires and/or axles have been removed, they must be replaced with minimum 6000 lb. rated axles and 3000 lb. rated tires. On axle assemblies, the condition of the bearings and brakes must be checked and repaired if necessary. Tires must be checked for proper inflation, minimum 1/16" tread and checks and splits.
* 2x6 diagonal shipping braces must be secured at the front and in the axle area after the units have been separated.

* Ridge beam supports must be placed at maximum 8' O.C. in open areas.

* Appliances must be secured to prevent movement during transportation.

* Dust caps must be placed on the ends of all pipe connections.

* Any home that is stored more than 15 days must be blocked to prevent excessive deflection and possible structural damage. The blocks must be placed under each I-Beam at the rear of the home and midway between the axles and hitch.

* Remember, this home was designed to be transported with only minimal contents. If additional furniture, personal belongings, set-up materials or other items are stored in the home during transit, **substantial** damage may result. This damage is not covered under the warranty.

!!! CAUTION !!!

Do not store items in this home which were not originally shipped in the home if it is being moved. Additional weight during shipment will result in transit damage.

The National Mobile Home Construction & Safety Standards Act is administered by the Department of Housing & Urban Development (HUD). Any questions concerning the Act or consumer's rights under the Act, should be directed to H.U.D. In order to contact H.U.D., you should refer to the Department of Housing and Urban Development under listings for the U.S. Government in your phone book. Your letter or call should be directed to the "Consumer Complaint Offices" in the local H.U.D. or F.H.A. office. The central H.U.D. office may be contacted directly by writing or calling the Mobile Home Standards Division, Department of Housing and Development, Washington, D.C. 20410. (Telephone: 202/472-4703).

FUQUA HOMES, INC.

"The Better Idea Homes"