HOMARK

FILE COPY

1-7-88

SINGLE SECTION INSTALLATION INSTRUCTIONS MANUAL

★ ★ NOTICE ★ ★
★ ★ ATTENTION ★ ★

DEAR HOMEOWNER:

THE HOMARK COMPANY, INC., THANKS YOU FOR SELECTING A QUALITY, HOMARK HOME. WE URGE YOU TO READ THE HOMEOWNER'S MANUAL AND INSTALLATION INSTRUCTION BOOKLET CAREFULLY. PLEASE PAY SPECIAL ATTENTION TO THE TOPICS OF GROUND PREPARATION UNDER YOUR HOME, THE INSTALLATION AND PROPER VENTILATION OF CLOTHES DRYERS, SKIRTING VENTILATION AND PROPER INDOOR HUMIDITY. IF YOU CONTRACTED WITH OTHERS TO PERFORM ANY OF THESE SERVICES, MAKE SURE THAT THEY RECEIVE A COPY OF THE INSTRUCTIONS AND THAT THEY HAVE BEEN FOLLOWED.

REMEMBER, IMPROPER INSTALLATION, WHICH WOULD CAUSE MISUSE OF THE PRODUCT, VOIDS YOUR WARRANTY.

The HOMARK Company, Inc.
100 Third Street Red Lake Falls, MN 56750
Telephone: 218-253-2777

TABLE OF CONTENTS

Introduction..... 1

Zone Maps..... 2

Site Preparation..... 5

Pier & FootingSelection..... 5

Pier Loads & Tie Downs..... 6

Pier & Footing Construction..... 7

Blocking & Leveling..... 8

Tie Down Instruction..... 9

Skirting..... 10

Bottom Board Patching..... 10

Hitch & Wheel Removal..... 11

Utility Hook-up & Testing..... 12
- Water Supply System..... 12
- Drainage..... 12
- Electrical..... 13
- Gas..... 14
- Oil..... 16

Optional Item Installation..... 17
- Clothes Dryer..... 17
- Fireplace..... 17
- Addendum #1..... 18
- Addendum #2..... 18

INTRODUCTION

This HOMARK home has been engineered, constructed, and inspected in accordance with The Department of Housing and Urban Development Manufactured Home Construction and Safety Standards as published in the Federal Register as in effect on the date of manufacture. This National Standard sets forth the requirements of design construction, fire safety, plumbing, heating systems and electrical systems for factory built housing designed to be used as dwellings.

The manual outlines the steps required for proper home installation and should be used by a qualified installation company. Local and State regulations may affect the installation of the home and the homeowner should insist the installation company conform to these regulations.

The drawings in this manual are intended to be representative of the homes; however, designs and specifications could change in the interest of product improvement. This manual is intended to instruct and to assist already qualified personnel in the proper installation of a HOMARK home. It is not intended to enable someone unfamiliar with home set-up to perform the installation.

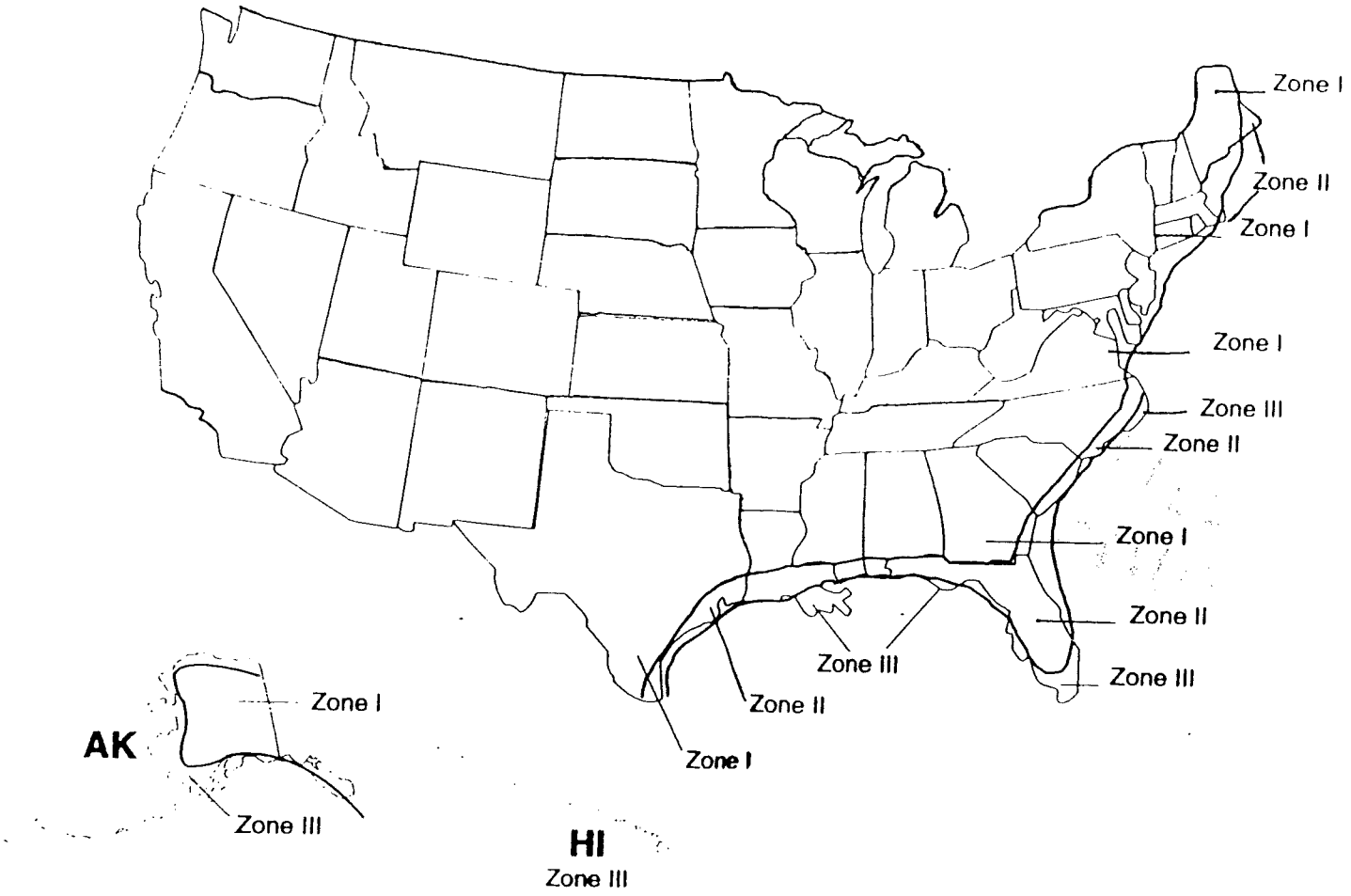

Design Wind-load Zones:

Standard Wind	Zone I	15 psf Horizontal	9 psf uplift*
Hurricane	Zone II	±39 psf Horizontal	27 psf uplift
Hurricane	Zone III	±47 psf Horizontal	32 psf uplift

* net uplift

Note --
psf: pounds per square foot

Reference -- Manufactured Home Construction and Safety Standards (MHCSS) 24 CFR 3280.305(c)(2), latest edition

Wind-load zone map (informational only)

U/O Value Zone Map for Manufactured Housing

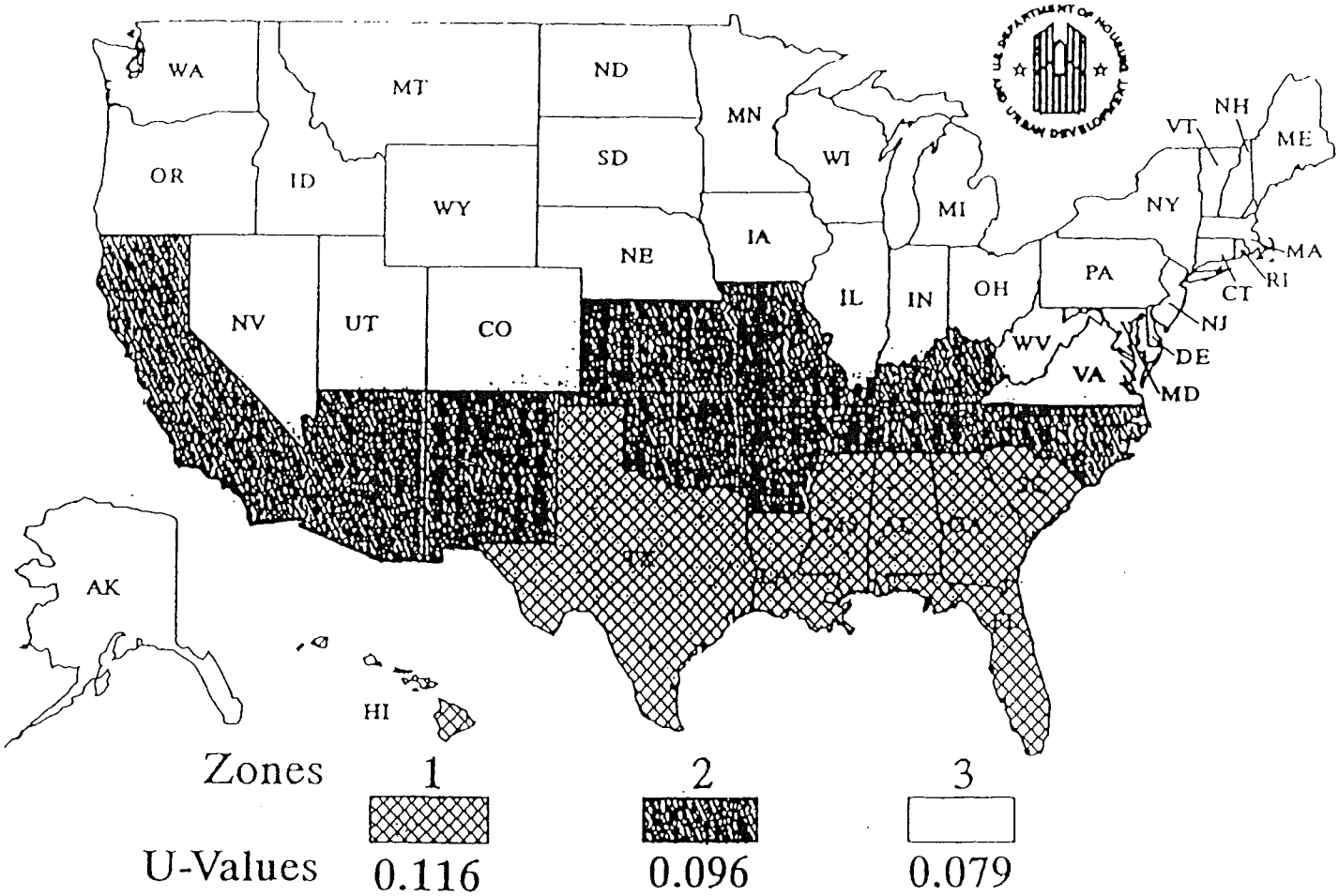

BILLING CODE 4210-67-0

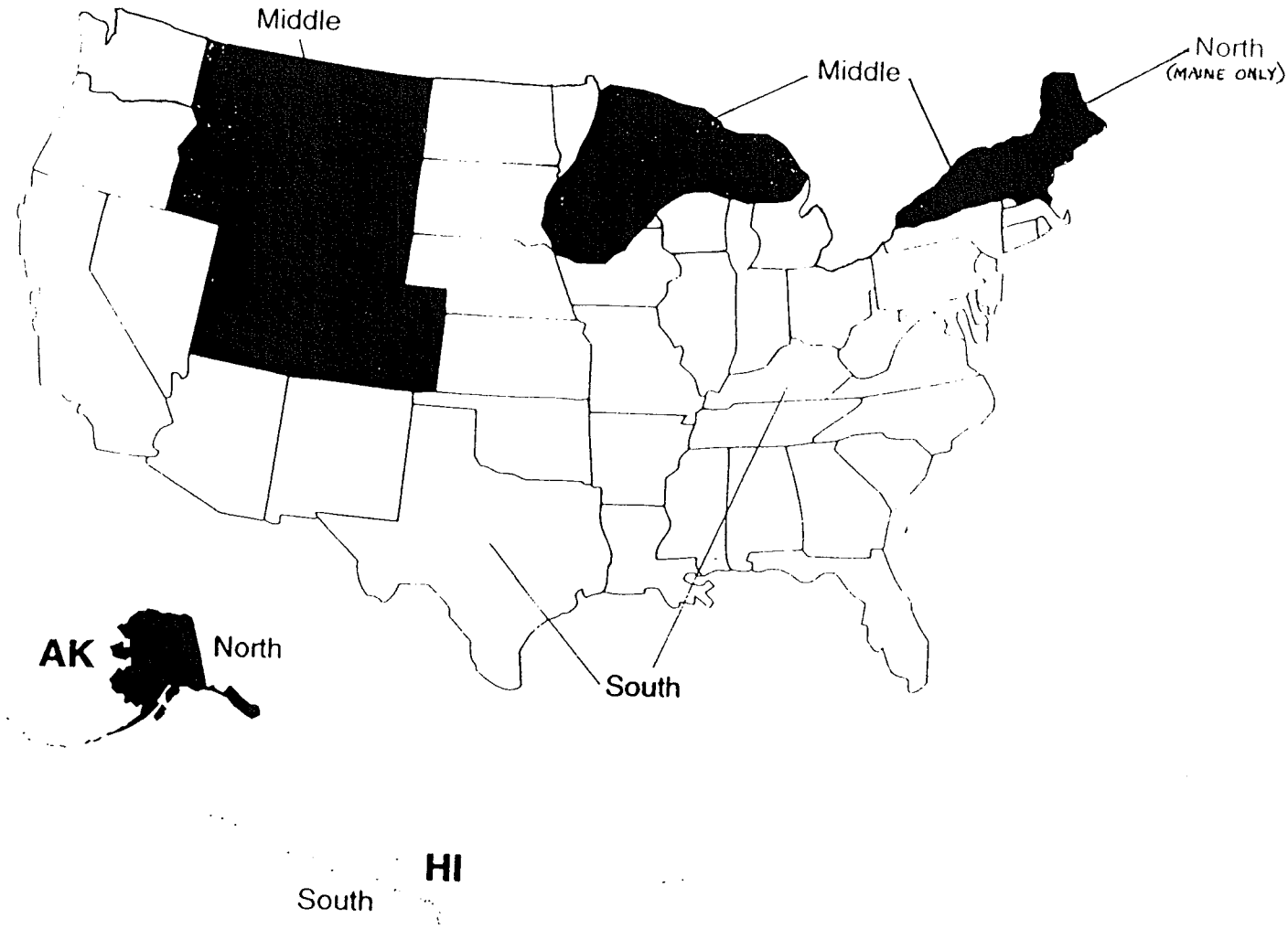

Design Roof-load Zones:

South	20 psf (pounds per square foot) minimum
Middle	30 psf (snow)
North	40 psf (snow)

Reference -- Manufactured Home Construction and Safety Standards (MHCSS) 24 CFR 3280.506, latest edition

Roof-load zone map (informational only)

ZONE MAPS

The zone maps will help you make installation decisions with regard to prevailing weather, in the zone where the home is to be located.

From the maps, determine and mark the zone where this home is to be located. This information will be required to determine information from other charts and tables in this manual.

NOTE: Do not install this home in a zone that requires greater loads or climatic requirements than those on the compliance certificate. You may install a home in a zone requiring lesser loads or climatic requirements.

SITE PREPARATION

The selected home site must be properly graded and sloped to provide for storm drainage run-off, in particular, the area beneath the home. Check local codes which may specify slope requirements. It is generally recommended that a slope of 1" to 12" be followed and that the site be evenly graded so that there are no depressions where surface water will accumulate, either underneath or outside the home. This is to prevent excessive humidity in the home.

Proper support for the home must allow for soil conditions in the immediate area. Pier footings must be placed on firm undisturbed soil (not loose fill) or soil which has been compacted to at least 90 percent of it's maximum relative density. Pier support may also be placed directly on concrete slabs designed for the home's placement.

Climate conditions must also be taken into account. If footings are placed on a frost-susceptible soil, such as clay or silt, heaving and/or settlement may occur. In areas where temperatures go below freezing, it is important that the pier footings be located below the frost line.

NOTE: If skirting is to be installed, the entire area under the home shall be covered with a blanket of visqueen. This is to prevent excessive humidity in the home. the visqueen should be a minimum of 6 mil thick and be overlapped 12" at all joints.

PIER & FOOTING SELECTION

The piers must have enough capacity to transmit the vertical load which includes the weight of the home, it's furnishings, and temporary roof loading to the foundation surface below it. If the load imposed is greater than the capacity of the piers, then additional piers must be installed to equal or exceed the load transmitted.

FLOOR LOADING

Excessively heavy furniture or appliances, such as pianos, organs, deep freezers, heavy chests, large china cabinets, water beds, fireplaces, etc., require the installation of additional support footings and piers directly beneath them.

Complete the following steps to determine the pier and footing requirements for the home.

1. Determine pier height to be used based on site conditions.
2. Determine main beam pier spacing from pier spacing chart.
3. Determine the soil bearing capacity, contact the local jurisdictional authority for building codes or run tests. If tests are run, always use a qualified professional to determine the capacity.

PIER LOADS IN POUNDS
30 PSF SNOW LOAD (MIDDLE ZONE)

WIDTH	PIER SPACING IN FEET							
	8	9	10	11	12	13	14	15
12' WIDE MODULE	4400	4950	5500	6050	6600	7150	7700	8250
14' WIDE MODULE	5080	5715	6350	6985	7620	8255	8890	
16' WIDE MODULE	5760	6480	7200	7920	8640	9360		

FOOTING AREAS IN SQUARE FEET
30 PSF SNOW LOAD (MIDDLE ZONE)
ASSUMES 1000 PSF SOIL CAPACITY*

WIDTH	PIER SPACING IN FEET							
	8	9	10	11	12	13	14	15
12' WIDE MODULE	5.1	5.7	6.3	6.9	7.6	8.2	8.8	9.5
14' WIDE MODULE	5.8	6.6	7.3	8.0	8.8	9.5	10.2	
16' WIDE MODULE	6.6	7.4	8.3	9.1	9.9	10.8		

NED C. MYERS
REGISTERED
No. 14617
STATE OF
INDIANA
PROFESSIONAL ENGINEER

Ned C. Myers
1/7/88

* IF SOIL CAPACITY IS 2000 PSF DIVIDE AREA BY 2
IF SOIL CAPACITY IS 3000 PSF DIVIDE AREA BY 3
IF SOIL CAPACITY IS 4000 PSF DIVIDE AREA BY 4

TIE DOWN EQUIPMENT

Anchoring equipment shall be installed in accordance with the product manufacturers instruction. Anchoring equipment shall be capable of resisting an allowable working load equal to or exceeding 3,150 pounds and shall be capable of withstanding a 50 per cent overload (4,725 pounds total) without failure. Frame tie strapping material must meet or exceed the following specifications: Type 1, Finish B, Grade 1 steel strapping, 1.25" x .035", conforming with ASTM Standard Specification D 3953-91, Standard Specification for Strapping, Flat Steel, and Seals.

PIER & FOOTING CONSTRUCTION

Pier & footing design should be as illustrated below:

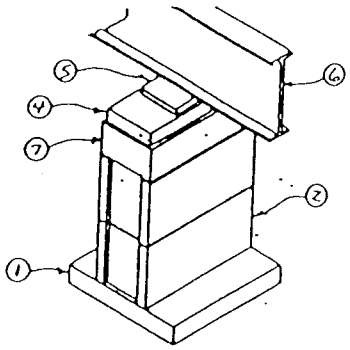

From grade to main beam up to 32" high

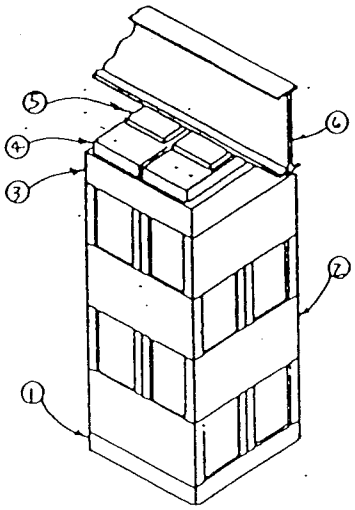

From grade to main beam up to 48" high

PIER CONSTRUCTION CONFORMS TO ANSI A225.2 MANUFACTURED HOME INSTALLATION.

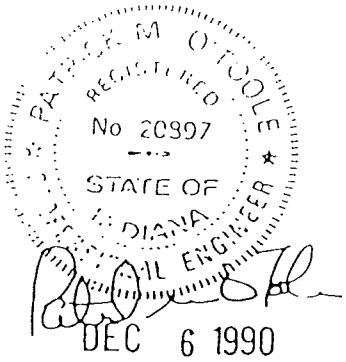

1. Footing - solid concrete below frost line.
2. Pier - concrete blocks 8"x 8"x 16" (cells vertical).
3. Cap Block - 16"x 16"x 4", solid concrete.
4. Wood Plate - 2"x 8"x 16".
5. Two alternate hardwood shims minimum of 2" in width to be driven in tightly and not to occupy more than 1" vertical space, and used to level the unit.
   See shim detail below.
6. Main Frame.
7. Cap block - 8"x 16"x 4", solid concrete.

NOTES:

A. Pier foundation to be placed on stable soil.
B. If over 48" in height (from grade to bottom of main frame), pier to be designed by a qualified architect or engineer.
C. 2"x 8"x 16" solid concrete blocks may be used in combination with item #2.

Alternate methods and materials may be used; however, HOMARK declines any responsibility and requires that a qualified architect or engineer approve the system design.

SHIMS: 4"x 6" Long (min) Not to occupy more than 1" of vertical space.

BLOCKING & LEVELING

Basic Tools Requirement

The listing below contains only major items. Individual setup crews may have alternate equipment.

1. Two jacks with a minimum 8 ton rating.
2. Two steel plates with a minimum size of 3/8 x 2 1/2 x 5" to use between the jack and main beams.
3. 6' carpenter's level.

Follow these step-by-step procedures to avoid placing undue stress on structural members of the home.

A. Level the home front to rear by means of the hitch jack.

B. Place one jack forward of the front spring hanger and another just behind the rear spring hanger under one of the main beams.

C. Operating the two jacks simultaneously, raise the home, install footings and piers next to the jacks.

D. Jack up the front and rear end of the main beam, under which you have just installed two piers, to a level position and install a footing and pier 1'-0" from each end. The home should now be near level from front to rear along the first main beam.

E. Repeat the preceding three steps on the other main beam, bringing the home level crosswise and lengthwise.

F. Place the remaining footings and piers along the main beams taking care not to exceed the maximum pier spacing as specified on detail blocking and tie down equipment.

TIE-DOWN INSTRUCTIONS

Blocking and tie down of the home may be done by one of three different systems. Tie downs may not be located more than 1" from pier locations.

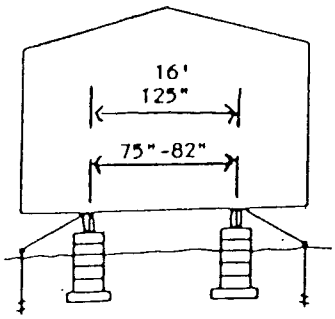

SYSTEM #1:

Requires frame ties only. Pier and tie downs must be located within 1' of each end. See chart for maximum spacing of pier and frame tie downs.

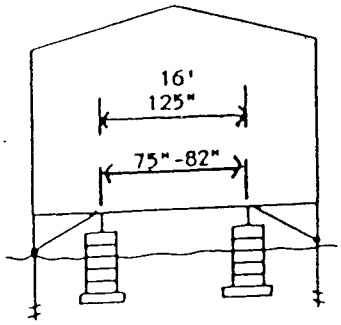

SYSTEM #2:

Requires frame ties with over the roof ties at each end. See chart for maximum spacing of pier and frame tie downs.

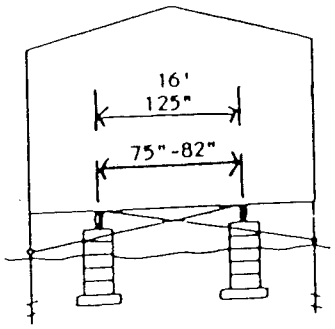

SYSTEM #3:

Requires frame cross ties with over the roof ties at each end and one in the middle. See chart for maximum spacing of pier and frame tie downs.

NOTE: Before any pier or anchors are installed, check to assure that underground pipes, wires, cables and/or utility services are not located where pier or anchors are located.

MAXIMUM FRAME
TIE DOWN SPACING
IN FEET FOR ZONE 1
(15 PSF WIND LOAD)

PIER HEIGHT	16"			24"			32"			40"			48"		
	Pier			Pier			Pier			Pier			Pier		
System:	1	2	3	1	2	3	1	2	3	1	2	3	1	2	3
12' Wide	12	12	16	11	11	16	10	10	15	8	8	15	8	8	15
14' Wide	12	14	15	12	12	15	11	11	15	10	10	15	9	9	14
16' Wide	12	12	14	10	10	14	9	9	14	8	8	14	7	7	14

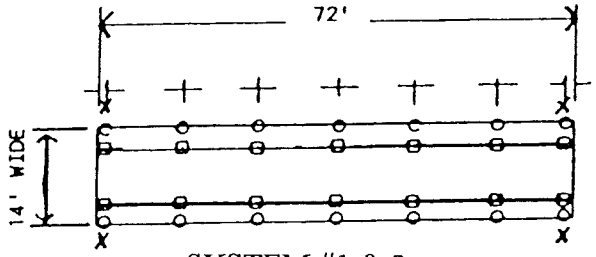

SYSTEM #1 & 2

Typical blocking & tie down for 7214 with 24" height pier and system #1 or #2

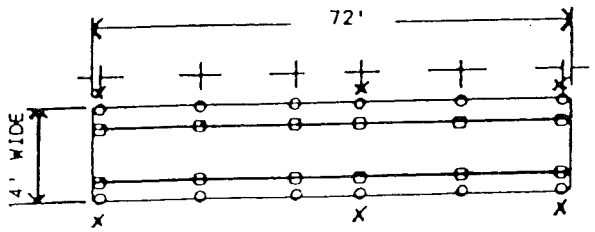

SYSTEM #3

Typical blocking & tie down for 7214 with any height of pier with system #3

☐ Denotes pier
O Denotes ground anchor
X Denotes over the roof strap location for system 2 and 3

NOTE: Perimeter blocking required on all openings 48" or larger.

SKIRTING

HOMARK recommends installation of skirting. Not only does it improve the appearance of the home, but it also reduces the energy used to heat and cool your home. Skirting helps keep the floors warmer in the winter, cooler in the summer, and helps prevent plumbing freeze-ups in winter. Some manufactured home parks require that all manufactured homes be skirted.

When skirting your home, provisions should be made to prevent the accumulation of moisture which can cause condensation or damage.

Before skirting is installed, the entire area under the home must be covered with a blanket of visqueen. This is to prevent excessive humidity in the home. The visqueen must be a minimum, of 6 mil thick and be overlapped 12" at all joints.

The skirting around the home must be provided with non-closing vents. The free air of the vents must be equal to, but not less than 1/300th of the floor area of the home. (Divide sq. ft. of home by 300). The vents must be located to provide cross ventilation to the entire area under the home.

If the home is equipped with a fuel burning, sealed combustion appliance with fresh air intake under the home, such as furnace, water heater, and/or wood burning fireplace, a vent must be provided in the skirting adjacent to the fresh air inlet(s) of the appliance. Vents must be sized in accordance with equipment manufacturer's installation instructions.

An access door must be provided in the skirting so you or a service person can get under the home for routine inspections, or in case of emergencies.

Special provisions must be made for venting clothes dryers beyond the perimeter of your home. **Dryers must not, under any circumstances, be allowed to vent under the home.** For special instructions for venting dryers see clothes dryer section.

BOTTOM BOARD PATCHING

Below are listed some of the different patching methods which offer the dealer, or home buyer, a means of resealing the bottom board.

Affix the patch with an approved bottom board tape. It is recommended that #620 tape from First Line Corp. of Valdosta, Georgia be used.

1. Holes or punctures in bottom board to be taped with #620 tape.
2. Cuts or rips in bottom board required for maintenance work . Draw edges together with 4" strips of tape perpendicular to the direction of opening every 4"-6". Finish applying lengthwise strips of tape over the joined edges insuring a complete edge seal.
3. Large holes or cutouts. A patch may be cut from bottom board material and taped in place per item #2 above. Large patches may require stapling or nailing to adjacent joists to insure the patch will stay in place. In either case, edge taping should be done to seal the edges.
4. Should bottom board material or tape not be available, .019 aluminum may be nailed, stapled or screwed over damaged area and putty caulk used to insure an edge seal.

HITCH & WHEEL REMOVAL & STORAGE

The front hitch used to transport the home may be designed to be detachable, for aesthetic purposes it may be removed after set-up. However, the hitch should be retained in the event the home is ever relocated. Common practice is to store the hitch under the home where it will be protected from the elements and concealed by the skirting.

During or after set-up, it is common practice to remove the wheels and tires. The axles and complete suspension system may be removed.

In some states and localities, owners are allowed to dispose of this equipment, while in others they may not. Before disposing of axles and suspension systems be sure to check carefully with the dealer and/or local authorities.

This equipment is commonly stored under the home on a waterproof substance, like vinyl sheeting, where it is protected and concealed by the skirting. After wheel removal, hub surfaces should be coated with heavy grease to resist rust and corrosion.

The tires, wheels and suspension systems are designed ONLY for use to transport this manufactured home. They are not designed for any other purpose.

EXHAUST SYSTEMS

Visually inspect bathroom and kitchen exhaust vents to see that they are free and clear to the outside of the home and that nothing has been disturbed due to in-transit vibrations.

UTILITY HOOKUP AND TESTING

This section of the manual deals with the connections of the water supply, drainage, gas, oil and electrical systems of the home to the site service. All utility connections must be made by qualified service personnel who are knowledgeable of local and state regulations. Testing of all utilities must be satisfactorily performed before occupancy.

The following information will assist in determining the proper connection procedures for which the home was designed and serve as a guide for inspection of the system upon completion.

Upon completion of your utility installation, it is important that access to connections be provided for periodic inspection and possible future service.

WATER SUPPLY SYSTEM

A tag affixed to the exterior of the home will indicate the location of the fresh water connection. If the home is not equipped with a master water shut-off valve either a full port gate or a full port ball valve shall be installed. If the water supply to the home has a pressure in excess of 80 PSI a pressure reducer must be installed.

The water system was tested at the factory however, it is essential that it be rechecked at the site for leaks that may have been caused by in-transit vibrations.

NOTE: Water heater must be by-passed during test. The test involves use of pressurized air which can permanently damage the water heater or may even cause rupture or explosion which could result in serious injury. The water heater is by-passed by disconnecting both the cold water line inlet and the hot water line outlet from the water heater and connecting the hot and cold water lines together with appropriate connection fittings.

WATER TESTING PROCEDURE:

A. Close all water faucets, spigots and stool tank float valves.
B. Pressurize the system to 100 PSI.
C. Isolate the pressure source from the system.
D. The gauge must stand 15 minutes with no drop.
E. If leakage is evident, locate the problem and correct. Retest system as described above.
F. After successful completion of test, reconnect the water heater and connect the water supply to the home water inlet.
G. Turn on the water supply and visually check all connections for leakage. Operate all water faucets, shower etc. to clear air blocks.

DRAIN SYSTEM HOOKUP & TESTING

The drainage system was checked for leaks at the factory; however, it is essential that it be rechecked at the site for leaks which may have been caused by in-transit vibrations.

If the home is equipped with a secondary drop it must be connected to the main stool drop with a 3" drain line and fittings shipped loose with the home. The solvent cement used to make the drain line connections must be compatible with the pipe installed in the home and be used in accordance with the manufacturer's instruction on the container.

With the drop under home tightly capped and the tub and shower drains plugged, fill the drainage system until the toilet bowl (s) are full to the rim(s). The water should stand without dropping for 15 minutes.

Fill fixtures which are higher than the toilet bowl (lavatories, sink, etc.) with water. Check these fixture connection and P-traps for leaks as you allow the water to flow through the system.

ELECTRICAL SYSTEM HOOKUP & TESTING

The electrical test and connection of the home should be made only be qualified personnel in accordance with applicable sections of the National Electrical Code along with any additional requirements imposed by local authorities having jurisdiction.

Exterior light fixtures and other 110 volt appliances: Connect wires, black to black, white to white and ground to ground, using wire nuts.

Push wires into box and place putty tape on light fixture base secure fixtures in position.

Install bulb and apply caulking around base of light fixture to insure a water-tight seal to the wall.

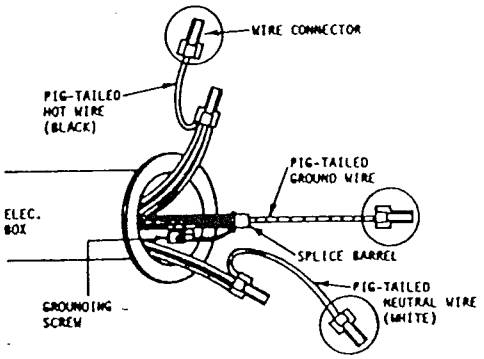

Connection of the electrical services: To determine applicable feeder size amperage, see main breaker and the label on electrical distribution panel. Using this information, determine the required feeder size from the following table:

ELECTRICAL FEEDER AND EQUIPMENT SIZES

Feeder Size (AMPS)	Maximum Neutral Feeder Load (AMPS)	Minimum Required Junction Box Size (Inches)	Feeder Sizes Based Upon Use of 75° C Insulated Copper Conductors: Black-"Power" Red-"Power" White-"Neutral"	Green or Bare Ground	Conduit (Inside Dia.)
100	100	10x10x4	#3 THW (Cu)	#8 (Cu)	1-1/2"
125	108	10x10x4	#1 THW (Cu)	#6 (Cu)	1-1/2"
150	115	12x12x6	#1/0 THW (Cu)	#6 (Cu)	2"
200	130	12x12x6	#3/0 THW (Cu)	#4 (Cu)	2"

CAUTION: If the home has an electric water heater, it must either be filled with water or have the circuit breaker turned "OFF" before energizing the home electrical system or severe damage to the heating element will result.

With the main panel box circuit breaker and all individual circuit breakers in the home turned off, make electrical service connections. When connections are complete, turn on power at electric meter source. Do not turn on the main panel box circuit breaker in the home until the grounding and continuity testing has been performed.

The grounding bar in the main electrical distribution panel box must be grounded by qualified personnel only. The grounding electrode conductor shall be sized in accordance with Article 250 Table 94 as follows, #8 for 100 & 125 Amp service, #4 for 200 Amp. service.

This home should be retested after set-up for the possibility of loosened connections which may have occurred during transit.

GROUNDING & CONTINUITY TEST

Perform the following test after all structural assembly, metal and trim installation is finished.

A. Connect one clip of flashlight continuity tester to a convenient ground (metal skin, window frame on metal skinned units, floor duct riser, screw head on receptacle or switch plate, etc.) and touch the other clip to each light fixture canopy (where the light is mounted to ceiling or wall). The continuity tester should light if each fixture is properly grounded.

B. Using the continuity tester, check every direct-connected appliance or fan. The tester must be hooked to a convenient ground and to the metal frame of the appliance.

C. Using the continuity tester, check the continuity between the following:
   1. Between one riser of furnace duct and convenient ground.
   2. Between metal roof and steel frame.
   3. Between metal skin and steel frame.
   4. Between metal gas piping and steel frame.

NOTE: Continuity to ground is not required on metal inlet of plastic piped water system.

5. Between electrical distribution panel and steel frame. When plumbing fixtures such as metallic sinks, tubs, faucets and shower risers are connected only to plastic water piping and plastic drain piping continuity to ground is not required.
6. In addition, if home water distribution lines are metal, the ground continuity between the water line inlet and steel frame and all metallic plumbing fixtures such as sinks, tubs, faucets, etc. must be checked.
7. Any loss of grounding continuity found in the above will require investigation and correction.

POLARITY & OPERATIONAL TEST

Turn on main panel box circuit breaker and then one at a time, turn on the individual home circuit breakers and perform the following test. Should any breaker trip, this indicates a problem with the circuit that must be located and corrected.

CAUTION: Make sure the water heater is filled with water before energizing.

A. Plug an AC receptacle wiring tester into each receptacle in the home to check for reversed polarity, open grounds and shorts.
B. Install light bulbs and fluorescent tubes in all light fixtures. Make sure each light fixture is operable by turning the appropriate switch to the "ON" position.
C. Repair or replace any defective light fixtures or switches. Check operating of furnace and water heater thermostats and set. Check and run furnace blower.
D. Conduct test of GFI (Ground Fault Interrupter) circuit breaker in accordance with the breaker manufacturer's instructions.
E. Conduct tests of the smoke detector(s) in accordance with the manufacturer's instructions.

GAS SYSTEM HOOKUP & TESTING

The gas piping system was tested at the factory; however, it is essential that it be rechecked at the site for leaks that may have been caused by in-transit vibrations.

NOTE: Do not apply more than the specified pressure as damage to gas valves and/or regulators may result.

Before a test is begun, the temperature of the ambient air and the piping should be approximately the same. Conduct the test when air temperature will remain stable.

The gas piping system must be tested two ways:

A. Piping only - all appliances isolated.
B. Entire system - with appliances.

PIPING ONLY TEST:

A. Isolate all appliances from the system by closing all appliance shut-off valves.
B. At the home gas inlet, attach a pressure gauge calibrated in ounces.
C. Pressurize the system to 3PSI or 48 ounces of air pressure.
D. Isolate the pressure source from the system.
E. The gauge must stand 10 minutes with no drop.
F. If pressure loss occurs, check all joints in piping system beneath the home and at all shut-off valves with soapy water or bubble solution until leak is located.
G. Repair leak and retest.

ENTIRE SYSTEM TEST:

A. All gas equipment controls and pilot light valves must be closed. Refer to individual gas equipment manufacturers instructions.
B. Gas shut-off valves for all gas equipment must be in the open position.
C. At the home gas inlet, attach a pressure gauge calibrated in ounces.
D. Pressurize the system to 6 to 8 ounces of air pressure.
E. With soapy water, or bubble solution, check all gas shut-off valves and flex line connections to valves and appliances for leaks.

CAUTION: Do not bubble check brass fittings with solution containing ammonia.

F. If leak is found, repair and retest.

NOTE: Prior to making connection to site supply, gas inlet orifices of furnaces, water heaters and appliances must be checked to insure they are set up for type of gas to be used - L.P. (Liquefied Petroleum) or natural gas. The gas pressure should not exceed 7" to 14" water column.

If conversion is required, individual appliance, furnace or water heater manufacturer's instructions must be complied with.

Gas appliance vents shall be visually inspected to insure that they have been connected to the appliance and roof jacks are installed and have not come loose due to in-transit vibrations.

The gas connection to the gas supply should be made by an authorized representative of the gas company. this connection shall not be down sized from what is provided on the home.

If the home has gas piping stubbed in for future installation of appliances, a shut-off valve and threaded pipe plug or cap will be installed at the factory and all of the above tests should be performed on the system.

After completion of tests, close equipment shut-off valves and connect gas supply to the home gas inlet. One at a time, open each equipment valve and light pilots and adjust burners according to each appliance/equipment manufacturer's instructions. Check the operation of the furnace and water heater thermostats and set.

CAUTION: Make sure water heater is filled with water before lighting pilot.

OIL PIPING HOOKUP & TESTING

Homes produced by THE HOMARK COMPANY, INC., which are equipped with oil burning furnaces must have the oil supply piping installed on site. Piping is not supplied by HOMARK.

The furnace manufacturer's instructions must be consulted for proper pipe sizing and installation procedures.

In addition, unless the home is installed in a park with a centralized oil distribution system, an oil storage tank of suitable capacity must be installed outside the home in a location accessible for service, and safe from fire and other hazards.

Oil tanks that feed vaporizing - type oil furnaces must be installed so that oil flows by gravity. To achieve efficient gravity flow the tank must be installed so that the bottom of the tank is at least 8 inches above the level of the furnace oil control, while top of the tank is within 8 feet of the oil control level.

For gun type oil furnaces the location of the oil storage tank is left to the discretion of the homeowner. Since the furnace includes a fuel pump, the tank may be installed above or below the ground. For tanks installed below ground the filler neck should extend 1 foot above grade and a 1-1/4 inch diameter minimum vent pipe extending at least 2 feet above grade must be provided.

Regardless of the type of oil furnace served, or the tank location, the tank should be installed to provide a gradual slope toward the fill end or drain plug (if so equipped) to facilitate pumping of draining of water and sludge.

An accessible and approved manually operated shut-off valve must be installed at the oil tank outlet. Additionally, it is recommended that a suitable filter be installed in the fuel line near the tank to help trap dirt and water.

NOTE: All oil storage tank and oil piping installations must meet all applicable local regulations and should be made only be experienced, qualified personnel.

BEFORE setting the system in operation, the tank installation and supply piping must be checked for leakage. the tank must be filled to capacity with the fuel to be burned and all joints in the system checked visually for leakage.

OPTIONAL ITEM INSTALLATION

THE HOMARK COMPANY, INC. cannot be responsible for any damage resulting from installation of accessories, nor any modifications to the home after shipment from the factory. Such alterations are undertaken at the risk of the installer and/or homeowner.

CLOTHES DRYER

Your home may be designed for the future installation of an electric or gas clothes dryer. A venting system access through the floor or wall has been installed at the factory and the complete installation should be in compliance with the appliance manufacturer's instruction.

Homes factory equipped with the provision for the installation of a dryer will also have the moisture-lint exhaust system roughed-in. To complete the moisture-lint exhaust system, the following must be performed:

1. Remove cover from vent pipe if through sidewall. If through floor remove panel on wall, cut out floor vinyl and cut hole in bottom board.
2. If venting design is through the floor termination fitting is to be installed at the outside edge of the skirting.
3. Secure flexible duct between the termination fitting and dryer by use of clamps. (Do not use sheet metal screws or other devices which extend into the interior of the duct.)
4. Seal all holes where the duct goes through the floor or wall with a good grade of caulking or tape.

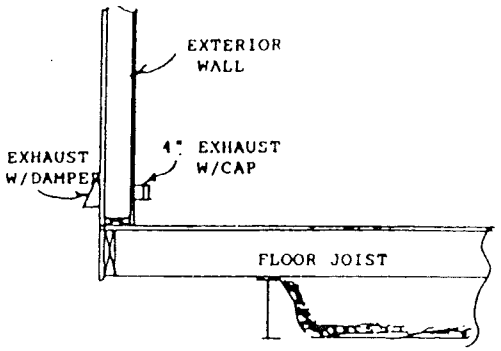

DRYER VENTING THROUGH EXT. WALL

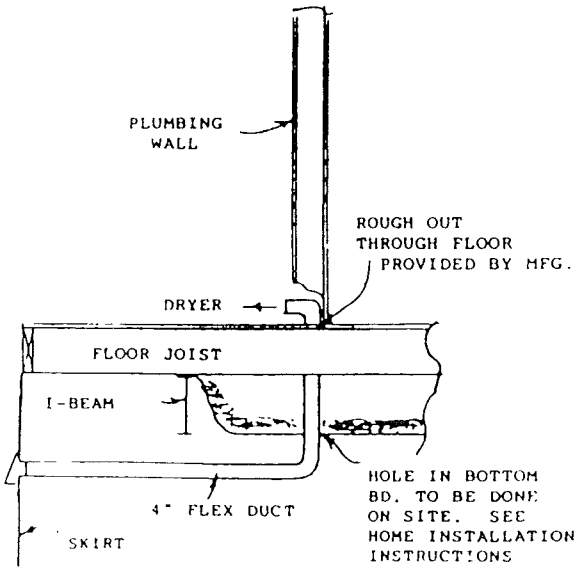

DRYER VENTING THROUGH FLOOR

Homes factory equipped with a gas dryer stubbed-in outlet will be provided with a shut-off valve and threaded pipe plug or cap and will also have an access for the moisture-lint exhaust system. All gas supply piping and venting must be installed according to the dryer manufacturer's installation instruction. Gas dryer installation must be handled by fully qualified experienced personnel only.

NOTE: The dryer vent must not exhaust into the skirted area under the home. this is to prevent excessive humidity in the home.

FIREPLACE CHIMNEY INSTALLATION

Homes equipped with fireplaces require that the installation of additional section(s) of chimney pipe and a rain cap assembly be made on site.

To insure sufficient draft for fireplace, the finished chimney MUST extend 3 feet above the highest point where it penetrates the roof and MUST be at least 2 feet higher than any building or other obstruction located within a horizontal distance of 10 feet.

Parts necessary to complete the installation are provided. Note, however, that chimney section (s) provided will be sized of sufficient length to meet the above stated requirement for the home only.

If the site has obstructions extending higher than the home's roof peak within 10 feet of the chimney, an additional section of chimney pipe may have to be provided by the installer.

Chimney installation must be made in accordance with fireplace manufacturer's instructions. Typical chimney installation is as follows:

1. Remove transit protective covering from over the chimney.
2. Install additional chimney section(s) provided and secure.
3. Install spark arrestor.
4. Install rain cap assembly.

ADDENDUM #1

ANCHORING EQUIPMENT & ANCHOR REQUIREMENTS

ANCHORS:

Minimum anchor capacity required is as noted and indicated on P.E. Certified Pier & Tie-Down details.

Anchors should be certified by a professional engineer, architect, or a nationally recognized testing laboratory as to their resistance, based on the maximum angle of diagonal tie and/or vertical tie loading and angle of anchor installation and type of soil in which the anchor is to installed.

Ground anchors should be embedded below the frost line an be at least 12 inches above the water table.

Ground anchors should be installed to their full depth, and stabilizer plates should be installed to provide added resistance to overturning or sliding forces.

ANCHORING EQUIPMENT (STRAPS, CONNECTORS, ETC.)

Anchor straps should be Type 1, Finish B, Grade 1 steel strapping, 1-1/4 inches wide and 0.035 inches in thickness, certified by a registered professional engineer or architect as conforming with ASTM Standard Specification D3953-91, Standard Specification for Strapping, Flat Steel and Seals.

Where a vertical tie and a diagonal tie are located at the same place, both ties may be connected to a single anchor, provided that the anchor used is capable of carrying both loads, simultaneously.

Anchoring equipment exposed to weathering shall have a resistance to weather deterioration at least equivalent to that provided by a coating of zinc on steel of not less that 0.30 ounces per square foot of surface coated.

ADDENDUM #2

ALL REFERENCE TO MOBILE HOMES SHOULD NOW BE REFERRED TO AS MANUFACTURED HOMES.

ALL REFERENCES TO ZONE 2 & HURRICANE ZONE ARE NO LONGER VALID.

★ ★ NOTICE ★ ★
★ ★ ATTENTION ★ ★

DEAR HOMEOWNER:

THE HOMARK COMPANY, INC., THANKS YOU FOR SELECTING A QUALITY, HOMARK HOME. WE URGE YOU TO READ THE HOMEOWNER'S MANUAL AND INSTALLATION INSTRUCTION BOOKLET CAREFULLY. PLEASE PAY SPECIAL ATTENTION TO THE TOPICS OF GROUND PREPARATION UNDER YOUR HOME, THE INSTALLATION AND PROPER VENTILATION OF CLOTHES DRYERS, SKIRTING VENTILATION AND PROPER INDOOR HUMIDITY. IF YOU CONTRACTED WITH OTHERS TO PERFORM ANY OF THESE SERVICES, MAKE SURE THAT THEY RECEIVE A COPY OF THE INSTRUCTIONS AND THAT THEY HAVE BEEN FOLLOWED.

REMEMBER, IMPROPER INSTALLATION, WHICH WOULD CAUSE MISUSE OF THE PRODUCT, VOIDS YOUR WARRANTY.