SINGLE UNIT MANUFACTURED HOME INSTALLATION MANUAL

FAIRMONT

FAIRMONT HOMES INC.

P.O. BOX 27

NAPPANEE, INDIANA 46550

9–88

N O T I C E

TO INSTALLERS AND SITE PREPARATION CONTRACTORS

NONCOMPLIANCE WITH THESE INSTALLATION INSTRUCTIONS MAY MAKE YOU LIABLE TO THE HOME OWNER OR OCCUPANTS FOR DAMAGE OR INJURY RESULTING FROM YOUR OMISSIONS OR INCORRECT OR DEFECTIVE WORK. ACCORDINGLY, CARE SHOULD BE EXERCISED IN CONFORMING TO THE REQUIREMENTS HEREIN.

N O T I C E

IMPROPERLY VENTED SKIRTING WILL CAUSE MOISTURE TO ACCUMULATE BENEATH THE HOME. WHEN SKIRTING THE BOTTOM OF THE HOME, VENTILATORS MUST BE INSTALLED. THE MINIMUM VENT AREA SHALL BE 1 SQUARE FOOT FOR EVERY 150 SQUARE FEET OF AREA UNDER THE HOME. EACH VENTILATOR MUST HAVE A MINIMUM OF 60 SQUARE INCHES OF NET FREE AREA. THE VENTILATORS MUST BE EQUALLY SPACED ALONG EACH SIDE OF THE HOME WITH ONE VENTILATOR BEING PLACED WITHIN 4 FEET OF EACH END OF THE HOME.

N O T I C E

TO THE HOME OWNER

PLEASE BE ADVISED THAT FAIRMONT HOMES, INC. DOES NOT PARTICIPATE IN RETAIL SALES. OUR UNITS ARE PURCHASED BY INDEPENDENT DEALERS, WHO IN TURN SELL THEM TO RETAIL CUSTOMERS. WE, OF COURSE, HAVE NO CONTROL OVER AND ARE NOT AWARE OF THE TERMS AND CONDITIONS OF THESE SALES, NOR THE MANNER IN WHICH THESE HOMES AND HOME SITES ARE PREPARED FOR FINAL INSTALLATION OF THE UNITS. IN LIKE MANNER, WE HAVE NO CONTROL OR OBLIGATION IN MATTERS CONCERNING AFTER MARKET ITEMS, SUCH AS INSTALLATION, SKIRTING, APPLIANCES AND/OR FURNISHINGS NOT ON THE FACTORY INVOICE, PORCHES, DECKS, AWNINGS, AND ETC.

TABLE OF CONTENTS

Introduction 1

FOUNDATION SYSTEM

Site Preparation 3

The Site 3

Footings 4

Piers 5

Alternate Footings 6

Positioning and Blocking 6

Proper Alignment 6

Reminders before Jacking 6

Jacking, Alignment, and Blocking Procedure 6

Tie Downs 8

Pre-Tie-Down Inspection 8

Bottomboard Closure 9

Consequences of Incorrect Blocking and Alignment 9

Illustrations 10

UTILITY SYSTEMS

General 19

Water Distribution, Connection, and Testing 19

Procedure for Testing the Water System 20

Draining the Water Lines 20

Waste Drainage System Connection and Testing 21

Gas System Connection and Testing 22

Oil Piping Connection and Testing 22

Electric System 23

Test Procedure for Electrical System 24

Illustrations 27

TABLE OF CONTENTS
(Continued)

GROUND ANCHORING SYSTEM

General 31

Design Criteria 31

Installation Instructions - Frame Tie Down Procedure . . . 32

Optional Over-the-Roof Strap Procedure 33

Alternate Procedures 33

Illustrations 34

MISCELLANEOUS OPTIONS AND CONNECTIONS

Central Air Conditioning 37

Self-Contained Air Conditioning Unit 37

A-Coil Air Conditioning Unit & Heat Pumps 37

General 37

Fireplaces 38

Furnace Roof Jack 38

Optional Dryer Venting Installation 38

Installation of Accessories 39

Light Fixture and Ceiling Fan Installation 39

Illustrations 40

FINAL INSPECTION

Exterior Siding and Trim 43

Roofs 43

Clearances 43

Caulking and/or Sealers 43

Egress Windows 44

Exterior Doors and Storms 44

Winter Precautions 44

INTRODUCTION

This Fairmont home was designed and constructed to meet or exceed the requirements of the National Manufactured Home Construction and Safety Standards which were in effect on the date of manufacture. This standard sets forth minimal requirements for the design, construction, electrical system, plumbing systems, heating system and thermal protection for manufactured homes designed to be used as single family dwellings.

These instructions are intended to instruct and assist already qualified personnel in the proper installation of your manufactured home. It is not intended to enable someone unfamiliar with manufactured homes to perform the installation. The installer should guarantee his work in writing for a reasonable time and should agree to realign the home in approximately 60 days from the time of initial installation.

A properly maintained installation will, under normal conditions, prevent the home from settling and avoid the possibility of incurring expensive repair bills. If your home is not set and maintained in proper alignment as it was designed, or if it is not set on a completely firm and proper foundation system as described in this instruction, certain portions of your home will undergo undue and unnatural structural strain. Such structural strain could lead to problems later. Typically, these problems appear in the form of the buckling, loosening or separating of wall coverings, exterior siding, floors and their covering, ceilings, metal roof membranes and miscellaneous fixed original fixtures and cabinets of the home. Other problems relating to installation include the leaking of doors, windows, roofs, ceilings, and exterior walls due to the loss of the weather seals in these areas, as well as the loss of proper operation of windows and doors and their locking devices.

Applicable local or state laws may have greater or more stringent requirements than outlined in this manual, which must be complied with to obtain or regain the right to occupy the home. Therefore, we recommend that you consult with regulatory agencies in your area for codes which may require license and/or permits.

It is of the utmost importance that the electrical feeder connection to your home be installed in accordance with the instructions in this manual and in the diagram located at the electrical distribution panel with the home. **IT IS ABSOLUTELY ESSENTIAL THAT A 4-WIRE ENTRANCE BE USED. WITHOUT THE 4-WIRE ENTRANCE THE CIRCUIT BREAKERS WILL NOT FUNCTION AND A SHORT CIRCUIT AT ANY TIME COULD CAUSE ELECTROCUTION.** Please refer to the heading "Electrical System" in Section C of the Home Owners Manual.

Before installation of your manufactured home, consult the Structual Design Basis Certificate and the Heating and Cooling Design Basis Certificate to be certain that the home was constructed to meet the loading and climate requirements of your area. You may install this home in a zone requiring lesser loads or climate requirements. These certificates are part of the Compliance Certificate which is located at the electrical distribution panel or in a kitchen overhead cabinet.

Because new products and methods are constantly being introduced, additional or revised instructions may be required. The applicable addendum may be found inside the back cover of this instruction.

FOUNDATION SYSTEM

FOUNDATION SYSTEM

Site Preparation

Your Fairmont home has been designed with an integral floor system which must be supported by individual supports or piers. These supports are as important to the correct and proper installation of your home as is the foundation for a multi-story commercial building. Any shortcomings in the support of your home will manifest itself in the form of settling, which was discussed in the introduction to these instructions.

Fairmont Homes, Inc. is not liable for damages or defects in installation or those caused by improper installation or in delivery by other than manufacturer's drivers; nor by acts of God or by damage or defects caused by use of home as a moving van for weights exceeding the original delivery weight, or those caused by improper foundation, pad, piers, or lack of proper alignment.

All manufactured home installations shall comply with the requirements of these instructions or the requirements of local zoning ordinances and conditional use permits established by local authorities pertaining to any health and/or safety codes, whichever is more stringent.

The Site

Your homesite must be selected so as to provide a reasonably level surface in the area of home placement. The site must be properly graded and sloped to provide storm drainage run-off. In particular, the area beneath the home must be graded to prevent water accumulation. It is recommended that a 2-inch grade be provided from the longitudinal center line of the home to each edge. The entire area under the home must be covered with 6-mil thick visqueen. The visqueen is to be overlapped 6 inches at all joists in a manner to assure proper moisture run-off. To protect the visqueen from physical damage it is recommended that the area under the home then be covered with crushed stone or washed gravel to a thickness of 4 inches (see figure 1). In high moisture areas or areas with extremely high water tables, it may be necessary to install a positive soil drain system to alleviate the moisture condition under the home.

That portion of the lot or site intended for placement of the home must be undisturbed soil or compacted fill. If the site is on filled soil, it must be compacted to at least 95 percent of its maximum relative density. This is necessary to prevent the soil from settling and damaging the foundation or allowing it to settle.

Climatic conditions must also be taken into consideration when installing the foundation. The bottom of the footing on which the pier is to be placed must be located below the local frost line. If you elect to locate your footings above the local frost line, your foundation will be susceptible to the heaving and resultant settling action caused by frost. The symptoms of heaving are the same as for settling and can cause damage to your home. Consult with the building officials in your area to determine the maximum depth of the local frost line prior to installing your footings.

It is also very important that the house be properly skirted to conserve energy and provide added comfort. The skirting must be installed in a manner which prevents it from collecting the water from rainfall or melting snow and ice, which cascades down the sides of the home. The area beneath the home must be ventilated. The minimum vent area shall be 1 square foot of net free area (area

of opening in grillwork) for every 150 square feet of area under the home. (Length of home multiplied by width of home divided by 150 equals net free area of vent required in square feet). Each ventilator must have a minimum of 60 square inches of net free area. Install an equal number of ventilators along each side of the home. One ventilator should be within 4 feet of each end of the home with the remainder equally spaced along the length of the home and located across from one another. This will allow for cross-ventilation and dissipate damaging condensation.

Footings

For maximum safety and secure living your home must be supported on a solid foundation. The proper size and locations for the foundation footings are shown in figures 2 and 3 and in charts 1 through 3(a).

Poured-in-place or pre-cast concrete footings having a minimum 8-inch thickness are required. Where footings must exceed a minimum 8-inch depth to extend below the local frost depth, pre-cast footings are not recommended. The concrete must have a minimum 28-day compression strength of not less than 2,000 pounds per square inch. The footings must be flat on the top surface to allow for the proper bearing of the single or double stack concrete block piers. Footings which have rounded top surfaces or are to small in size to allow the entire block pier to bear on them are unacceptable. The maximum allowable slope on the top surface of the footings, in any direction, will be 1/8 of an inch per 12 inches of footing size. In all cases the footings must extend below the maximum local frost line. Consult with your local building officials to determine the maximum depth of the local frost line prior to installing your footings. The stability of your home is dependent on the quality of the footing/pier system and the properly installed tie-downs addressed later in this instruction. You may refer to figure 4 for an example of the wide variance of average frost depths throughout the United States.

CAUTION

IF THE FOOTINGS ARE NOT PLACED BELOW THE MAXIMUM LOCAL FROST LINE AND UPWARD HEAVING OCCURS, THE HOME CAN BECOME MISALIGNED AND ACTUALLY DAMAGED BY UNSEEN FORCES. DAMAGE CAUSED BY IMPROPER INSTALLATION AND SUPPORT OF YOUR HOME IS NOT WARRANTED BY THIS COMPANY.

Footings must be sized to allow for the entire bearing surface of the concrete block pier. The minimum size footings for a single stack pier will be as follows: a rectangular footing must be at least 8 inches by 16 inches (128 square inches), a square footing must be at least 16 inches by 16 inches (256 square inches), and a round footing must have a diameter of at least 17-1/4 inches (234 square inches). The minimum size footing for a double stack pier will be as follows: a rectangular or square footing must be at least 16 inches by 16 inches (256 square inches) and a round footing must have a diameter of at least 25-3/4 inches (521 square inches). **IN NO CASE SHOULD THE FOOTINGS BE SMALLER IN SIZE THAN THE RECOMMENDED SIZES SHOWN IN CHARTS 1 through 3(a).**

Additional footings will need to be placed at the ends of exterior side wall openings which are larger than 4 feet in width in a manner to support the concentrated loads which occur at the sides of these openings. Construction of these footings will be the same as the footings placed under the main steel I-beams of the unit.

Piers

All piers used to support your home must have the capacity to carry the vertical load of the home itself, its contents, and temporary roof loads such as snow and ice to the footings below.

The piers shown in figures 5 through 11 are made of concrete blocks and are a nominal 8 inches by 8 inches by 16 inches conforming to ASTM C-90 with the open cells vertical, stacked true, and plumbed with a maximum horizontal block offset of 1/2 inch from the top to the bottom of the pier.

Single stacked block piers (figures 5 and 6) must be installed with the 16-inch dimension perpendicular to the main I-beam of the frame. The piers must be covered with a minimum 2 inch by 8 inch by 16 inch treated hard wood or concrete cap conforming to ASTM C-145.

The minimum height of any pier must be 12 inches. The maximum height for a single stack pier (see figures 5 and 6) is 30 inches and the maximum height for a double stack pier is 36 inches (see figure 7). Should you require a pier height above 36 inches, the pier as well as the footing must be designed by a registered professional engineer or architect at the home owner's or installer's expense. In like manner, any type of support system utilized in the installation of your home other than that contained in the manual must be designed by a registered professional engineer or architect who will inspect the installation for adherence to the design.

To properly size your footings it will be necessary to know the allowable soil bearing pressure for the soil at your home site. This information may be obtained from your local building official or by having a soil investigation and analysis of the site performed. Chart 4 has been included in this manual to provide a general description of soils and give an indication of the wide range of soil bearing pressures which may be encountered which will underscore the importance of the soil analysis.

The soil analysis and site investigation will also provide important information pertaining to the local water table, the drainage characteristics of the soil, the potential for soil expansion, and frost heave potential.

Once the allowable soil bearing pressure has been determined, it will be necessary to determine the roof load design zone for your home and site location by referring to the Structural Design Basis Certificate, Design Roof Load Zone Map, installed in your home.

Next determine the spacing between the piers you plan to use, either 6 feet on center or 8 feet on center, and whether you want to use only I-beam blocking or a combination of I-beam and perimeter blocking. (The use of perimeter blocking does not eliminate the need for support of side wall openings in excess of 4 feet in width.) The choice is up to you.

Select the chart which applies to the width of your home and the roof load rating (20 PSF, 30 PSF or 40 PSF) and determine the footing size required for the soil bearing capacity of your site based on pier spacing and location. The greater the soil bearing capacity, the smaller the footing required. Footings may be square or round as you prefer but must have a minimum bearing area as called for in the chart.

Alternate Footings

Should you decide to install your home on a concrete pad, it is recommended that the pad be not less than 6 inches in thickness, that the perimeter of the pad be not less than 8 inches in thickness for a width of 12 inches, that the area within 12 inches of either side of each I-beam be 8 inches in thickness (24 inches wide - see figure 12), and that the pad be reinforced. The concrete must have a minimum 28-day compression strength of not less than 3,000 pounds per square inch with a slump of 4.

Positioning and Blocking

The site must be properly prepared as instructed earlier in this manual prior to positioning your home. All concrete work must be completed, all ground anchoring devices must be installed, and all service facilities including water, gas, electrical, and drain connections must be complete.

If any trenching must be accomplished for long run drain lines or for the wheels and axles (if they are going to be left in place), this should be performed at this time. Any other items which could be difficult to install after the home is positioned should be placed in their proper locations at this time.

Move the home into the desired position on the prepared site.

Proper Alignment

A manufactured home is cambered and reverse cambered along the I-beam as part of the engineering for the stress of transportation. Likewise, it is cambered from side to side for transportation stresses and live load as well as dead load stresses. Consequently, siding and flooring and roof lines will have variations due to camber lines which are normal. The home should be blocked and shimmed on the foundation to follow natural camber and reverse camber lines as the home is received from the factory.

There are many accepted methods of aligning homes; however, the method used in this manual will utilize a "water level." A water level is simply a plastic reservoir holding a colored water with approximately 80 feet of clear plastic tube attached. This device operates on the principle that water seeks its own level. See figure 13.

Reminders before Jacking

1. Use only jacks which are in good working condition having a rating of 12 tons or more.

2. To distribute the concentrated loads created by the jacks, a steel plate or pad should be placed between the jacks and the steel I-beam, C-channel, or tube.

3. Use a solid support under the jack base to keep the jack from settling or tipping. Excessive or non-uniform jacking during the alignment process can cause the home to be racked or twisted. This could result in serious structural damage to the home, thus voiding your warranty.

4. Always follow the sequence of jacking outlined below to avoid overstressing structural members.

Jacking, Alignment, and Blocking Procedure

1. Determine from figures 2 and 3 and charts 1 through 3(a)

the proper spacing for the piers to be located under the home. If a full concrete pad has not been installed at the site, concrete footings should have been installed as described earlier in this manual corresponding to the spacings called for in the tables. Remember, all exterior wall openings greater than 4 feet wide must be supported with piers.

2. Raise the hitch of the unit approximately 2 inches higher than its final position with the screw jack assembly or a heavy duty hydraulic jack. Adequate blocking should then be placed under the hitch assembly to prevent its falling to the ground if the jack assembly should fail. Place a 12-ton jack under each main frame member just to the rear of the rear spring hangers (see figures 14 and 15). These 2 jacks must be operated simultaneously to raise the home until it is approximately 2 inches higher than its final position.

3. The concrete pad or poured concrete footings should now be located under the I-beams and/or perimeter edge of the home adhering to specified spacing. Concrete block piers are then placed into position at the specified points on the pad or on the concrete footings. These piers must be constructed as described earlier in this manual and must rest fully on the pad or footings.

4. If the wheels are to be removed prior to the home being fully supported on its piers, safety supports should be placed tightly under the frame members to prevent the home from dropping should the jack fail. The wheels can then be removed and placed where the home owner specifies for storage.

5. The water level previously referred to is now positioned at a height whereby the level of the water inside the reservoir is exactly at the height the bottom of the steel frame will be in its final resting position. See figure 16.

6. By placing a shut-off valve at the end of the plastic tubing, the liquid will be prevented from escaping when the end of the hose is lowered below the level of the fluid in the reservoir.

7. By pulling the end of the plastic tube to the first pier, the end of the tube is raised above the bottom of the steel frame and the valve is opened. The top of the pier is then shimmed to match the level of the water in the tube. Remember that tapered hardwood shims must be added from each side of the frame member so that the frame is not resting on an incline (see figures 12 through 21). When this operation is complete, each succeeding pier is installed in the same manner. This operation will be much simpler if the top surface of all the concrete footings have the same elevation.

8. The safety support placed in the A-frame area should now be removed along with any supports which were placed in the axle area when the wheels may have been removed.

9. The jacks are then lowered together allowing the frame to rest on the tapered hardwood shims on top of the concrete block piers.

10. The screw jack assembly on the hitch is retracted so that it no longer supports the home and all jacks should be removed from under the frame.

11. The alignment of the home can be fine tuned by driving the tapered shims under the frame to even out any low areas caused by the compressive weight of the home on the piers.

12. After completion of the alignment and set-up procedure, all doors and windows should be checked to see that they operate freely without binding.

13. At this point the removable hitch and axles can be detached from the integral floor system if desired (removable hitch is optional) and placed where the home owner specifies for storage (see figures 22 and 23).

14. The completed set-up must be checked in 8 weeks with corrective action being taken to compensate for any pier or footing settlement, as well as any shim compression due to unit weight. All doors and windows should be checked to see that they still operate freely without binding. The set-up should further be checked on an annual basis as called for in the Home Owners Manual as owner maintenance.

Tie Downs

Once the home is in its final resting position and has been completely supported and aligned, the ground anchoring system can be installed. The purpose of the ground anchoring system is to provide resistance to counter the lateral and uplift forces of the wind which can move the unanchored home off its piers causing structural damage.

CAUTION

IF THE ANCHORING SYSTEM IS NOT PROPERLY INSTALLED, THE INTEGRAL FLOOR SYSTEM OF THE HOME COULD ACTUALLY BE DAMAGED OR THE ALIGNMENT OF THE HOME CHANGED.

Ground anchor straps or cables should be alternately tensioned on opposite sides of the home to avoid the problems mentioned above.

Pre-Tie-Down Inspection

At this time all furniture, carpet, fixtures, or other loose items should be installed. All shipping blocks, brackets, and/or clips installed on appliances for shipment should be removed. All clamps or brackets installed on windows and doors for shipping purposes should be removed and the operation of these items checked.

Should any windows or doors bind or not close properly, an adjustment to the alignment of the home is needed.

The utilities should now be connected and tested; however, this will be covered in another section of this instruction.

Bottomboard Closure

A special material is fastened to the bottom side of your new home. It has been installed at the factory to protect against rodents and unconditioned air. This covering was inspected at the factory, but could have been damaged during transit. It is important that the areas that are damaged be resealed.

1. If the covering is a vinyl coated material, use vinyl patching tape designed to repair tears or holes. If a hole is large, use a patch of the same or similar material as the bottom covering and tape the edges for an airtight seal.

2. If the bottom covering is an asphalt impregnated board, use a patch of the same material with beads of adhesive around the contact edges to insure an airtight seal. When the overlay is positioned over the damaged area, it is then fastened in position using an outward flare tacker. This requires a special tool designed to outward flare a 3/8" crown staple with 1" long legs through both the overlay and the bottomboard. The flaring action of this tool causes both materials to be tightly clenched together, requiring no other support.

3. The spacing of these staples should be no more than 6" apart around the perimeter of the overlay, with the second row placed inside approximating the edge of the damage or cut area.

4. The edge of the overlay should then be taped with a heavy weather-resistant tape used to seal ducts. This will insure that the repaired area is weatherproof.

Consequences of Incorrect Blocking and Alignment

Incorrect blocking and alignment of your home could produce a sagging home and these related conditions:

1. Buckling and/or loosening of walls, partitions, siding, ceilings, doors, floors, linoleum, carpeting, insulation, wiring, sinks, tubs, toilets, weather-stripping and miscellaneous fixed original fixtures of the home;

2. Leaking windows, doors, roofs, ceilings, walls, floors, seams, and junctions generally caused from rain, snow, or moisture;

3. Improper closing, binding, and sagging of windows, cabinets, and interior and exterior doors; and

4. Malfunctioning of plumbing, water outlets, lighting fixtures, and electric heating and air conditioning systems.

Inset Porches

Porch deck framework must be supported along its outer perimeter edge at each end and at the verticle columns along the porch. These supports are to be of the same construction as the piers described starting on page 5 and must be located a maximum of 6 feet on centers.

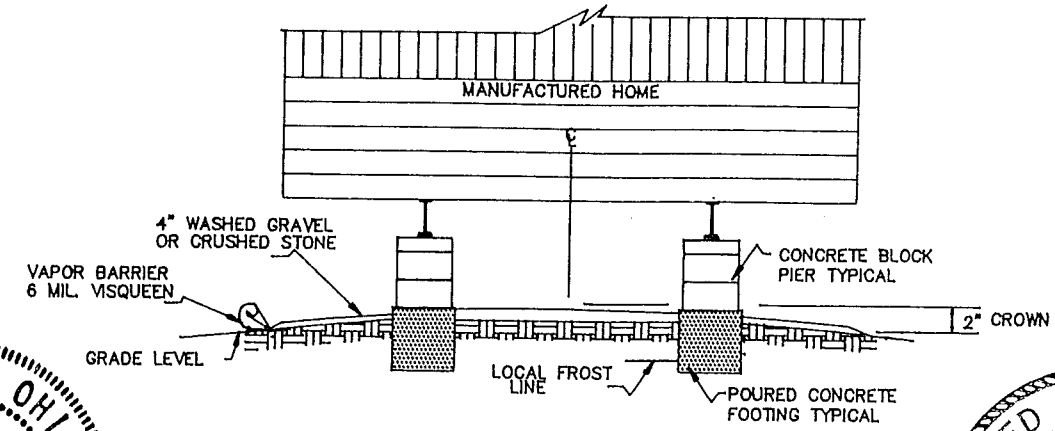

FIGURE 1

FRAME BLOCKING

STATE OF OHIO
NED C.
MYERS
37806
REGISTERED
PROFESSIONAL ENGINEER

NED C. MYERS
REGISTERED
No. 14617
STATE OF
INDIANA
PROFESSIONAL ENGINEER

Ned C. Myers
9/3/87

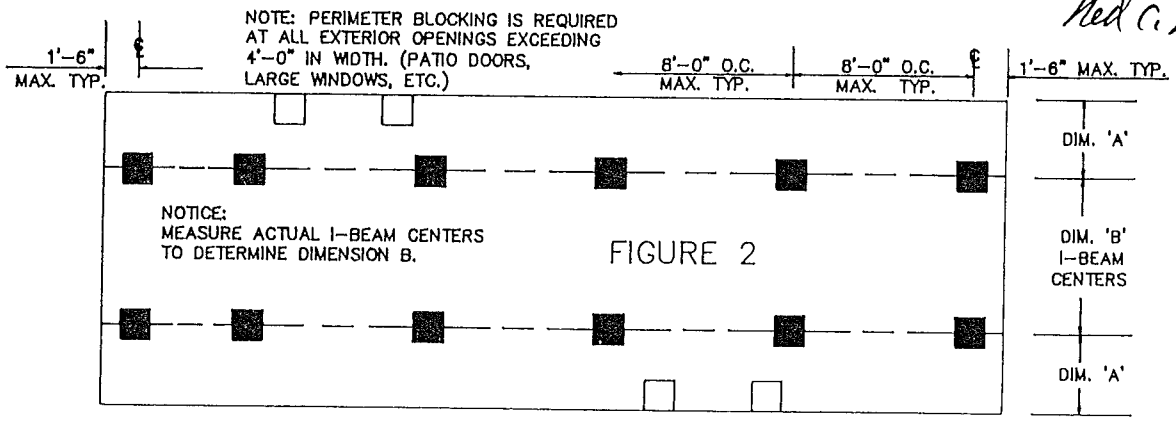

FIGURE 2

REFER TO CHARTS
1, 2, & 3

DIM. B	DIM. A 12' WIDE	DIM. A 14' WIDE	DIM. A 16' WIDE
82 1/2"	29 1/4"	41 1/4"	50 3/4"
95 1/2"	22 3/4"	34 3/4"	44 1/4"
99 1/2"	20 3/4"	32 3/4"	42 1/4"

PERIMETER AND FRAME BLOCKING

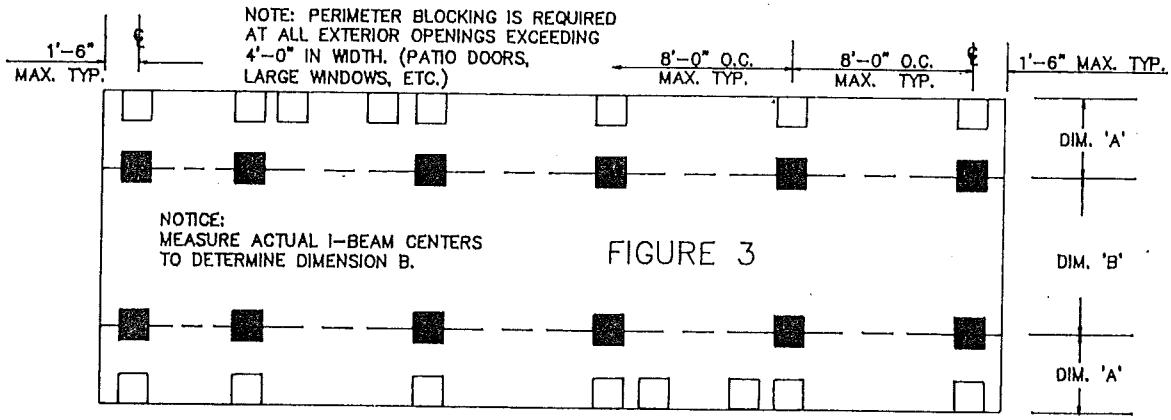

FIGURE 3

REFER TO CHARTS
1a, 2a, & 3a

DIM. B	DIM. A 12' WIDE	DIM. A 14' WIDE	DIM. A 16' WIDE
82 1/2"	29 1/4"	41 1/4"	50 3/4"
95 1/2"	22 3/4"	34 3/4"	44 1/4"
99 1/2"	20 3/4"	32 3/4"	42 1/4"

CHART 1

PIER & PAD SCHEDULE							SINGLEWIDE 20 POUND LIVE LOAD							
			12 FEET WIDE				14 FEET WIDE				16 FEET WIDE			
			8'–0" O.C.		6'–0" O.C.		8'–0" O.C.		6'–0" O.C.		8'–0" O.C.		6'–0" O.C.	
SOIL CAP.	LEGEND	PIER LOC.	REQ'D PIER CAPACITY (LBS.)	REQ'D FOOTING (SQ. IN.)	REQ'D PIER CAPACITY (LBS.)	REQ'D FOOTING (SQ. IN.)	REQ'D PIER CAPACITY (LBS.)	REQ'D FOOTING (SQ. IN.)	REQ'D PIER CAPACITY (LBS.)	REQ'D FOOTING (SQ. IN.)	REQ'D PIER CAPACITY (LBS.)	REQ'D FOOTING (SQ. IN.)	REQ'D PIER CAPACITY (LBS.)	REQ'D FOOTING (SQ. IN.)
1000	■	FRAME	4400	729	3300	546	5040	835	3780	626	5627	932	4220	699
1500	■	FRAME	4400	465	3300	348	5040	532	3780	399	5627	594	4220	446
2000	■	FRAME	4400	341	3300	255	5040	390	3780	293	5627	436	4220	327
2500	■	FRAME	4400	269	3300	201	5040	308	3780	231	5627	344	4220	258
3000	■	FRAME	4400	222	3300	166	5040	254	3780	191	5627	284	4220	213

CHART 1a

PIER & PAD SCHEDULE							SINGLEWIDE 20 POUND LIVE LOAD							
			12 FEET WIDE				14 FEET WIDE				16 FEET WIDE			
			8'–0" O.C.		6'–0" O.C.		8'–0" O.C.		6'–0" O.C.		8'–0" O.C.		6'–0" O.C.	
SOIL CAP.	LEGEND	PIER LOC.	REQ'D PIER CAPACITY (LBS.)	REQ'D FOOTING (SQ. IN.)	REQ'D PIER CAPACITY (LBS.)	REQ'D FOOTING (SQ. IN.)	REQ'D PIER CAPACITY (LBS.)	REQ'D FOOTING (SQ. IN.)	REQ'D PIER CAPACITY (LBS.)	REQ'D FOOTING (SQ. IN.)	REQ'D PIER CAPACITY (LBS.)	REQ'D FOOTING (SQ. IN.)	REQ'D PIER CAPACITY (LBS.)	REQ'D FOOTING (SQ. IN.)
1000	■	FRAME	1863	308	1397	231	2063	342	1547	256	2246	372	1684	279
	□	PERIMETER	2138	354	1603	265	2578	427	1933	320	2981	494	2236	370
1500	■	FRAME	1863	197	1397	148	2063	218	1547	163	2246	237	1684	178
	□	PERIMETER	2138	226	1603	169	2578	272	1933	204	2981	315	2236	236
2000	■	FRAME	1863	144	1397	108	2063	160	1547	120	2246	174	1684	130
	□	PERIMETER	2138	165	1603	124	2578	199	1933	150	2981	231	2236	173
2500	■	FRAME	1863	114	1397	85	2063	126	1547	94	2246	137	1684	103
	□	PERIMETER	2138	131	1603	98	2578	157	1933	118	2981	182	2236	136
3000	■	FRAME	1863	94	1397	70	2063	104	1547	78	2246	113	1684	85
	□	PERIMETER	2138	108	1603	81	2578	130	1933	97	2981	150	2236	113

CHART 2

PIER & PAD SCHEDULE							SINGLEWIDE 30 POUND LIVE LOAD							
			12 FEET WIDE				14 FEET WIDE				16 FEET WIDE			
			8'–0" O.C.		6'–0" O.C.		8'–0" O.C.		6'–0" O.C.		8'–0" O.C.		6'–0" O.C.	
SOIL CAP.	LEGEND	PIER LOC.	REQ'D PIER CAPACITY (LBS.)	REQ'D FOOTING (SQ. IN.)	REQ'D PIER CAPACITY (LBS.)	REQ'D FOOTING (SQ. IN.)	REQ'D PIER CAPACITY (LBS.)	REQ'D FOOTING (SQ. IN.)	REQ'D PIER CAPACITY (LBS.)	REQ'D FOOTING (SQ. IN.)	REQ'D PIER CAPACITY (LBS.)	REQ'D FOOTING (SQ. IN.)	REQ'D PIER CAPACITY (LBS.)	REQ'D FOOTING (SQ. IN.)
1000	■	FRAME	4950	820	3713	615	5670	939	4253	704	6330	1048	4748	786
1500	■	FRAME	4950	523	3713	392	5670	599	4253	449	6330	668	4748	501
2000	■	FRAME	4950	383	3713	287	5670	439	4253	329	6330	490	4748	367
2500	■	FRAME	4950	302	3713	227	5670	346	4253	260	6330	386	4748	290
3000	■	FRAME	4950	249	3713	187	5670	286	4253	214	6330	319	4748	239

NED C. MYERS REGISTERED No. 14617 STATE OF INDIANA PROFESSIONAL ENGINEER

STATE OF MICHIGAN NED C. MYERS ENGINEER No. 21127 REGISTERED PROFESSIONAL ENGINEER

STATE OF OHIO NED C. MYERS 37806 REGISTERED PROFESSIONAL ENGINEER

Ned C. Myers
8/31/88

CHART 2a

PIER & PAD SCHEDULE — SINGLEWIDE 30 POUND LIVE LOAD

SOIL CAP.	LEGEND	PIER LOC.	12 FEET WIDE 8'-0" O.C. REQ'D PIER CAPACITY (LBS.)	12 FEET WIDE 8'-0" O.C. REQ'D FOOTING (SQ. IN.)	12 FEET WIDE 6'-0" O.C. REQ'D PIER CAPACITY (LBS.)	12 FEET WIDE 6'-0" O.C. REQ'D FOOTING (SQ. IN.)	14 FEET WIDE 8'-0" O.C. REQ'D PIER CAPACITY (LBS.)	14 FEET WIDE 8'-0" O.C. REQ'D FOOTING (SQ. IN.)	14 FEET WIDE 6'-0" O.C. REQ'D PIER CAPACITY (LBS.)	14 FEET WIDE 6'-0" O.C. REQ'D FOOTING (SQ. IN.)	16 FEET WIDE 8'-0" O.C. REQ'D PIER CAPACITY (LBS.)	16 FEET WIDE 8'-0" O.C. REQ'D FOOTING (SQ. IN.)	16 FEET WIDE 6'-0" O.C. REQ'D PIER CAPACITY (LBS.)	16 FEET WIDE 6'-0" O.C. REQ'D FOOTING (SQ. IN.)
1000	■	FRAME	1863	308	1397	231	2063	342	1547	256	2246	372	1684	279
	□	PERIMETER	2688	445	2016	334	3208	531	2406	398	3684	610	2763	458
1500	■	FRAME	1863	197	1397	148	2063	218	1547	163	2246	237	1684	178
	□	PERIMETER	2688	284	2016	213	3208	339	2406	254	3684	389	2763	292
2000	■	FRAME	1863	144	1397	108	2063	160	1547	120	2246	174	1684	130
	□	PERIMETER	2688	208	2016	156	3208	248	2406	186	3684	285	2763	214
2500	■	FRAME	1863	114	1397	85	2063	126	1547	94	2246	137	1684	103
	□	PERIMETER	2688	164	2016	123	3208	196	2406	147	3684	225	2763	169
3000	■	FRAME	1863	94	1397	70	2063	104	1547	78	2246	113	1684	85
	□	PERIMETER	2688	135	2016	102	3208	162	2406	121	3684	186	2763	139

CHART 3

PIER & PAD SCHEDULE — SINGLEWIDE 40 POUND LIVE LOAD

SOIL CAP.	LEGEND	PIER LOC.	12 FEET WIDE 8'-0" O.C. REQ'D PIER CAPACITY (LBS.)	12 FEET WIDE 8'-0" O.C. REQ'D FOOTING (SQ. IN.)	12 FEET WIDE 6'-0" O.C. REQ'D PIER CAPACITY (LBS.)	12 FEET WIDE 6'-0" O.C. REQ'D FOOTING (SQ. IN.)	14 FEET WIDE 8'-0" O.C. REQ'D PIER CAPACITY (LBS.)	14 FEET WIDE 8'-0" O.C. REQ'D FOOTING (SQ. IN.)	14 FEET WIDE 6'-0" O.C. REQ'D PIER CAPACITY (LBS.)	14 FEET WIDE 6'-0" O.C. REQ'D FOOTING (SQ. IN.)	16 FEET WIDE 8'-0" O.C. REQ'D PIER CAPACITY (LBS.)	16 FEET WIDE 8'-0" O.C. REQ'D FOOTING (SQ. IN.)	16 FEET WIDE 6'-0" O.C. REQ'D PIER CAPACITY (LBS.)	16 FEET WIDE 6'-0" O.C. REQ'D FOOTING (SQ. IN.)
1000	■	FRAME	5500	911	4125	683	6300	1043	4725	782	7033	1165	5275	874
1500	■	FRAME	5500	581	4125	436	6300	665	4725	499	7033	743	5275	557
2000	■	FRAME	5500	426	4125	319	6300	488	4725	366	7033	544	5275	408
2500	■	FRAME	5500	336	4125	252	6300	385	4725	288	7033	429	5275	322
3000	■	FRAME	5500	277	4125	208	6300	318	4725	238	7033	354	5275	266

CHART 3a

PIER & PAD SCHEDULE — SINGLEWIDE 40 POUND LIVE LOAD

SOIL CAP.	LEGEND	PIER LOC.	12 FEET WIDE 8'-0" O.C. REQ'D PIER CAPACITY (LBS.)	12 FEET WIDE 8'-0" O.C. REQ'D FOOTING (SQ. IN.)	12 FEET WIDE 6'-0" O.C. REQ'D PIER CAPACITY (LBS.)	12 FEET WIDE 6'-0" O.C. REQ'D FOOTING (SQ. IN.)	14 FEET WIDE 8'-0" O.C. REQ'D PIER CAPACITY (LBS.)	14 FEET WIDE 8'-0" O.C. REQ'D FOOTING (SQ. IN.)	14 FEET WIDE 6'-0" O.C. REQ'D PIER CAPACITY (LBS.)	14 FEET WIDE 6'-0" O.C. REQ'D FOOTING (SQ. IN.)	16 FEET WIDE 8'-0" O.C. REQ'D PIER CAPACITY (LBS.)	16 FEET WIDE 8'-0" O.C. REQ'D FOOTING (SQ. IN.)	16 FEET WIDE 6'-0" O.C. REQ'D PIER CAPACITY (LBS.)	16 FEET WIDE 6'-0" O.C. REQ'D FOOTING (SQ. IN.)
1000	■	FRAME	1863	308	1397	231	2063	342	1547	256	2246	372	1684	279
	□	PERIMETER	3238	536	2428	402	3838	635	2878	477	4388	727	3291	545
1500	■	FRAME	1863	197	1397	148	2063	218	1547	163	2246	237	1684	178
	□	PERIMETER	3238	342	2428	256	3838	405	2878	304	4388	463	3291	347
2000	■	FRAME	1863	144	1397	108	2063	160	1547	120	2246	174	1684	130
	□	PERIMETER	3238	251	2428	188	3838	297	2878	223	4388	340	3291	255
2500	■	FRAME	1863	114	1397	85	2063	126	1547	94	2246	137	1684	103
	□	PERIMETER	3238	198	2428	148	3838	234	2878	176	4388	268	3291	201
3000	■	FRAME	1863	94	1397	70	2063	104	1547	78	2246	113	1684	85
	□	PERIMETER	3238	163	2428	122	3838	193	2878	145	4388	221	3291	166

NED C. MYERS REGISTERED No. 14617 STATE OF INDIANA PROFESSIONAL ENGINEER

STATE OF MICHIGAN NED C. MYERS ENGINEER No. 21127 REGISTERED PROFESSIONAL ENGINEER

STATE OF OHIO NED C. MYERS 37806 REGISTERED PROFESSIONAL ENGINEER

Ned C. Myers
8/31/88

CHART 4

SOIL TYPE (2)	ALLOWABLE PRESSURE (3) (POUNDS PER SQUARE FOOT)
ROCK, HARD PAN	4,000 AND UP
SANDY GRAVEL AND GRAVEL	2,000
SAND, SILTY SAND, CLAYEY SAND, SILTY GRAVEL, CLAYEY SILT	1,500
CLAY, SANDY CLAY, SILTY CLAY, CLAYEY SILT	1,000
UNCOMMITTED FILL	SEE NOTE (4)
PEAT, ORGANIC CLAYS	SEE NOTE (4)

NOTES:

(1.) TO BE USED ONLY WHEN NONE OF THE FOLLOWING IS AVAILABLE:
- a. SOILS INVESTIGATION & ANALYSIS OF SITE.
- b. COMPLIANCE WITH LOCAL BUILDING CODES.
- c. COMPETENT OPINION BY LOCAL ENGINEER OR BUILDING OFFICIAL.

(2) BASED ON UNIFIED CLASSIFICATION SYSTEM.

(3) NO ALLOWANCES MADE FOR OVERBURDEN PRESSURE, EMBEDMENT DEPTH, WATER TABLE HEIGHT, OR SETTLEMENT PROBLEMS.

(4) SPECIAL ANALYSIS REQUIRED.

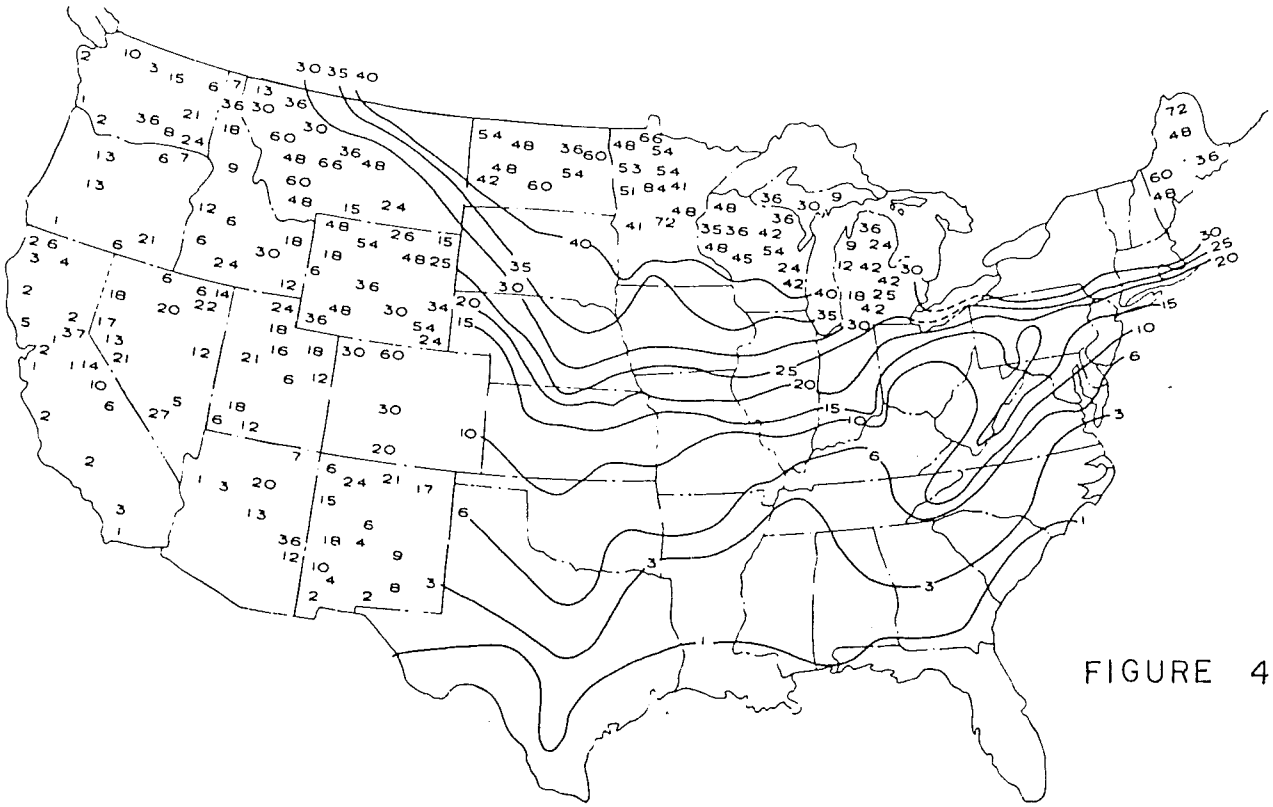

FIGURE 4

AVERAGE DEPTH OF FROST PENETRATION — IN INCHES

SOURCE: U.S. Dept. of Commerce Weather Bureau

FOOTING DETAILS

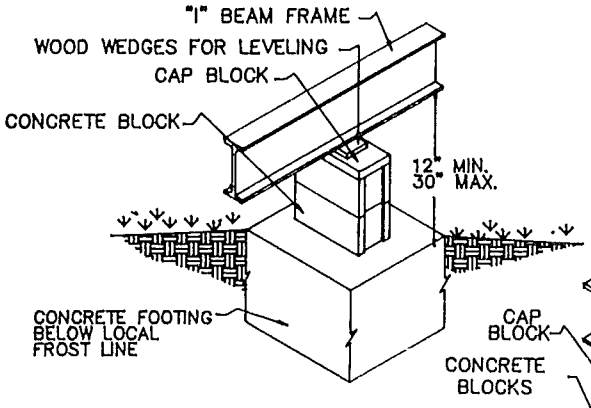

FIGURE 5

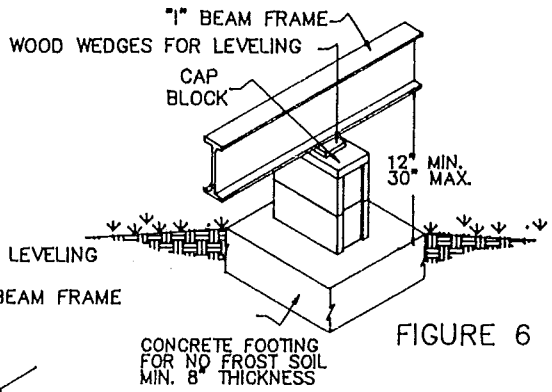

FIGURE 6

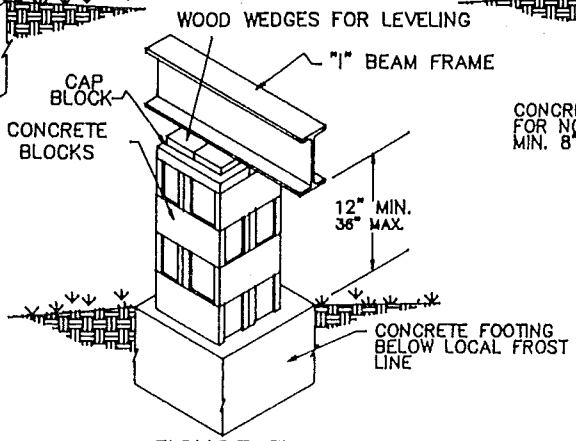

FIGURE 7

BLOCKING OFFSET DETAILS

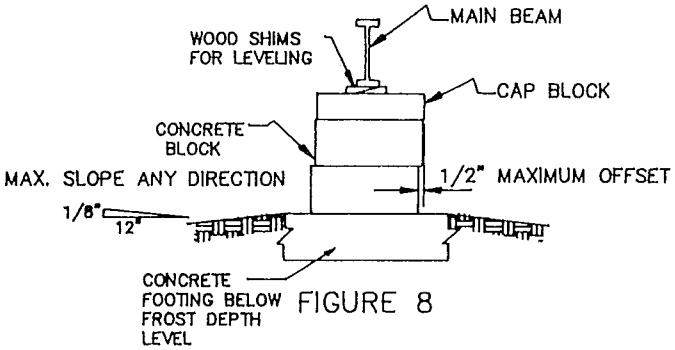

FIGURE 8

SPECIAL NOTES

FOOTING MUST BE LARGE ENOUGH TO ALLOW FOR FULL CONTACT BETWEEN THE BLOCKS AND THE FOOTING.

ALL FOOTINGS HAVE AN 8" MINIMUM THICKNESS, AND MUST EXTEND BELOW THE LOCAL FROST LINE.

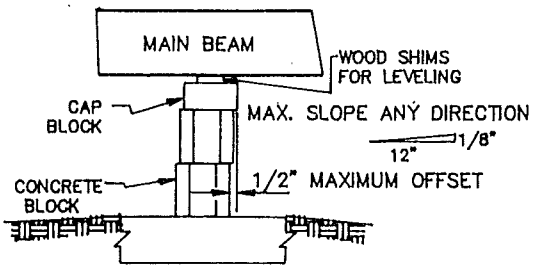

FIGURE 9

IMPROPER FOOTING DETAIL

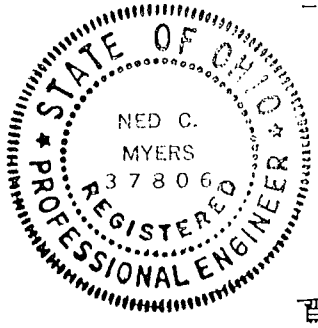

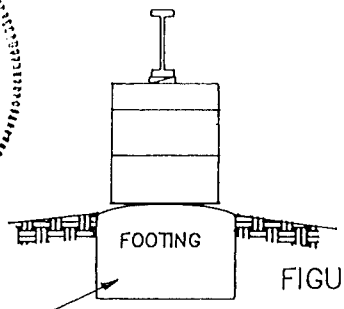

FIGURE 10

FOOTINGS WITH ROUNDED TOPS ARE UNACCEPTABLE! THEY WILL CAUSE THE BLOCK PIER AND THE HOME TO ROCK CREATING A FEELING OF UNSTABILITY.

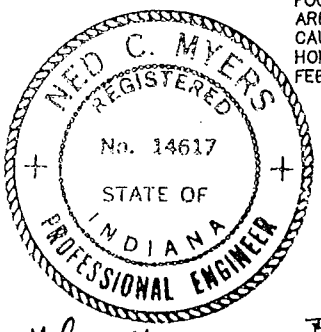

Ned C. Myers
8/19/87

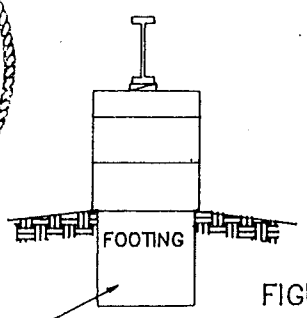

FIGURE 11

FOOTINGS MUST BE LARGE ENOUGH TO ALLOW FULL CONTACT BETWEEN THE PIERS AND THE BLOCKS.

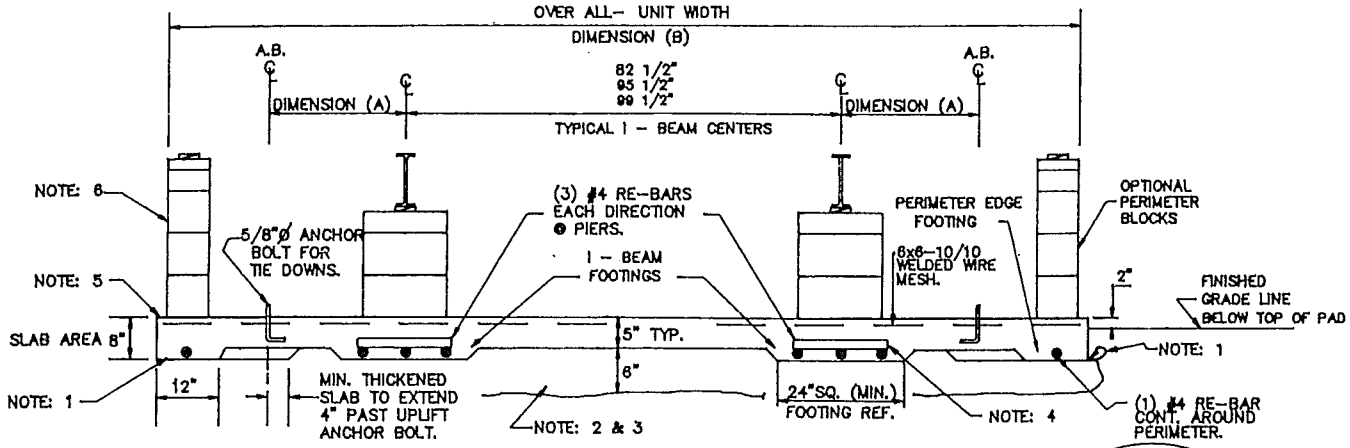

NOTES: (1) 6 MIL. VISQUEEN VAPOR BARRIER UNDER CONCRETE.
(2) ALL ORGANIC MATERIAL TO BE REMOVED FROM UNDER PAD.
(3) NON–ORGANIC FILL MUST BE COMPACTED TO 95% OF ITS' MAXIMUM RELATIVE DENSITY.
(4) RE–BARS LOCATED 3" FROM BOTTOM AND SIDES OF CONCRETE.
(5) CONCRETE TO BE 3000 P.S.I. MINIMUM WITH SLUMP OF 4.
(6) PERIMETER BLOCKING IS REQUIRED AT ALL EXTERIOR SIDEWALL OPENINGS EXCEEDING 4'–0" IN WIDTH (PATIO DOORS, LARGE WINDOWS, ETC.)

DIMENSION (A)
AS NEEDED TO MAINTAIN THE CORRECT STRAP ANGLES OF 67 AND 20 DEGREES.

DIMENSION (B)
12' WIDE 141"
14' WIDE 165"
16' WIDE 184"

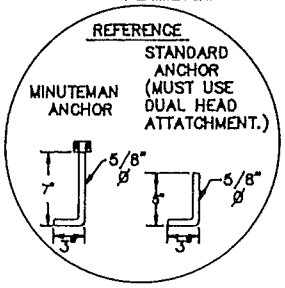

FIGURE 12

STATE OF OHIO
NED C. MYERS
37806
REGISTERED
PROFESSIONAL ENGINEER

NED C. MYERS
REGISTERED
No. 14617
STATE OF
INDIANA
PROFESSIONAL ENGINEER

Ned C. Myers
9/3/87

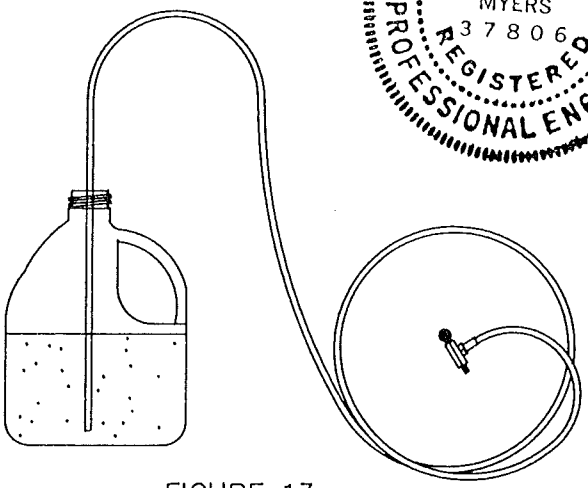

FIGURE 13

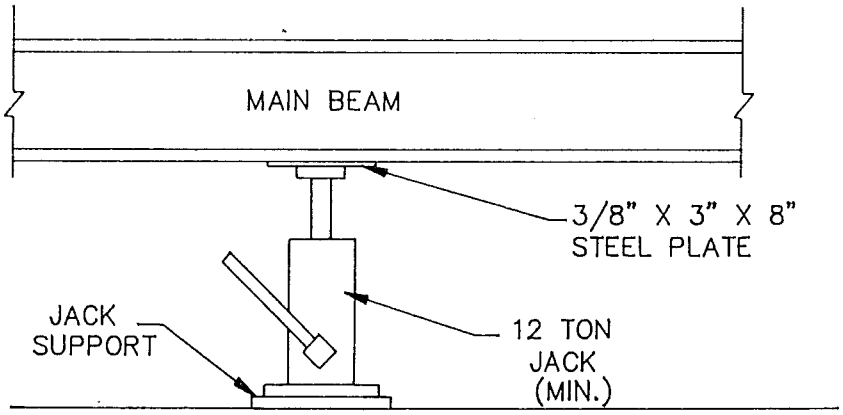

FIGURE 14

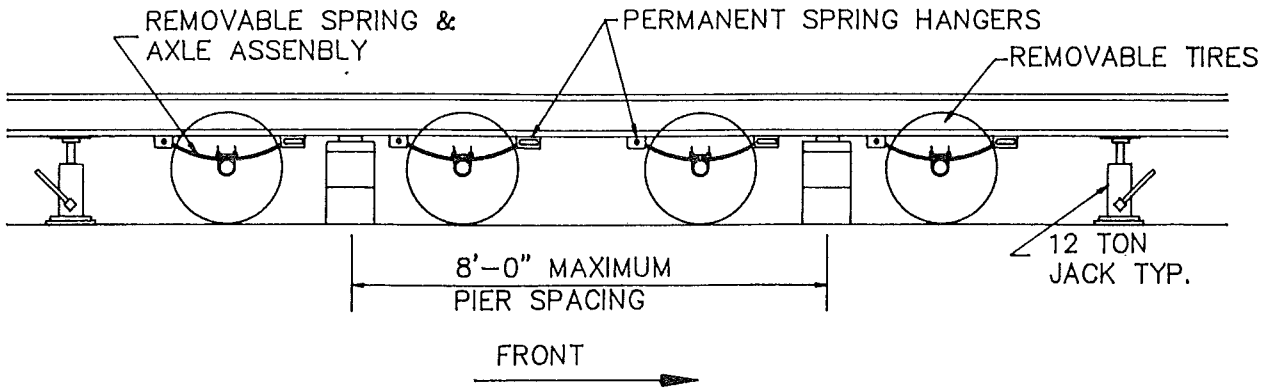

FIGURE 15

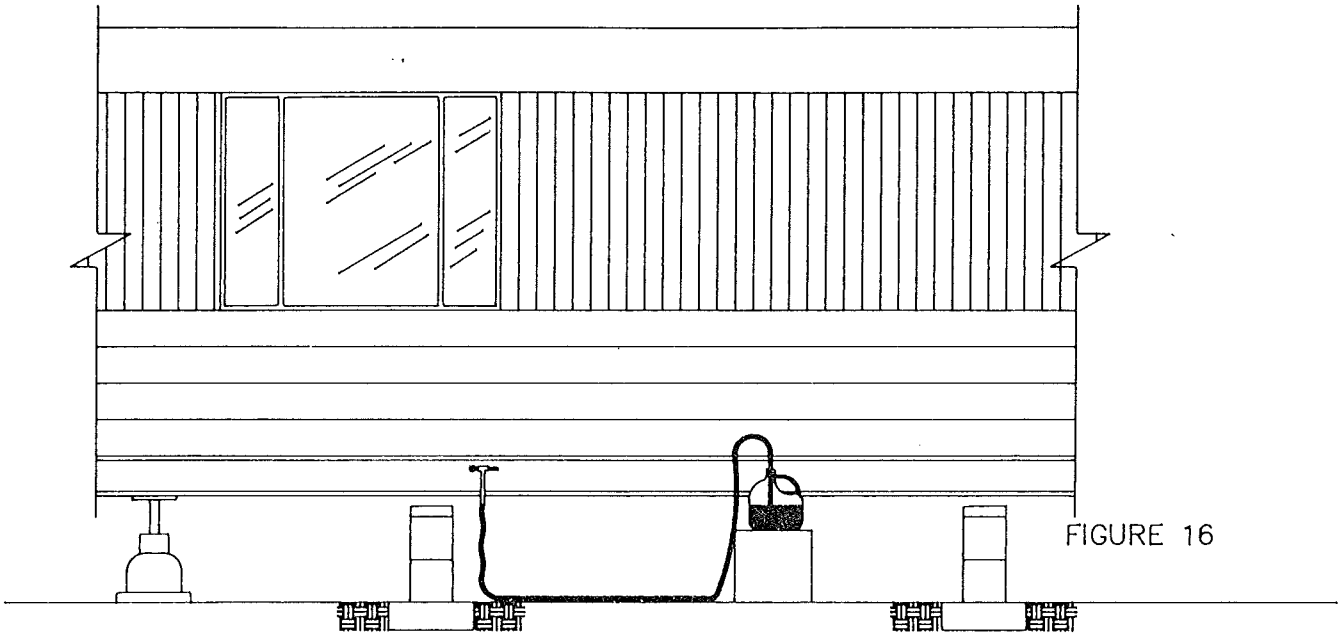

FIGURE 16

CORRECT
SHIM
PLACEMENT

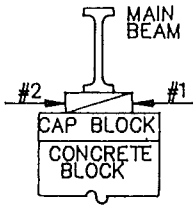

FIGURE 17

INCORRECT
SHIMMING

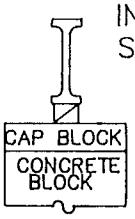

FIGURE 18

INCORRECT
SHIMMING

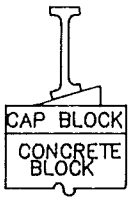

FIGURE 19

CORRECT
SHIM
PLACEMENT

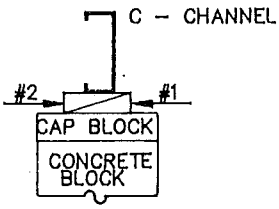

FIGURE 20

GENERAL

1) INCORRCET INSTALLATION OF SHIMS MAY CAUSE THE OBJECT BEING SHIMMED TO BEND, CREATING A ROTATION IN THE FLANGE.
2) TO PROPERLY INSTALL THE SHIMS PLACE THE SHIMS AS SHOWN IN ORDER OF SEQUENCE.

C - CHANNEL

INCORRECT
SHIMMING

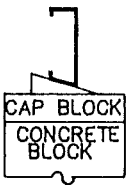

FIGURE 21

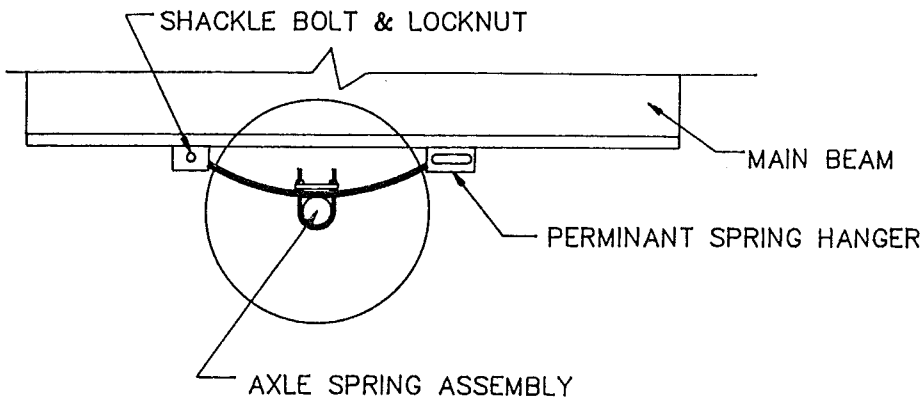

FIGURE 22

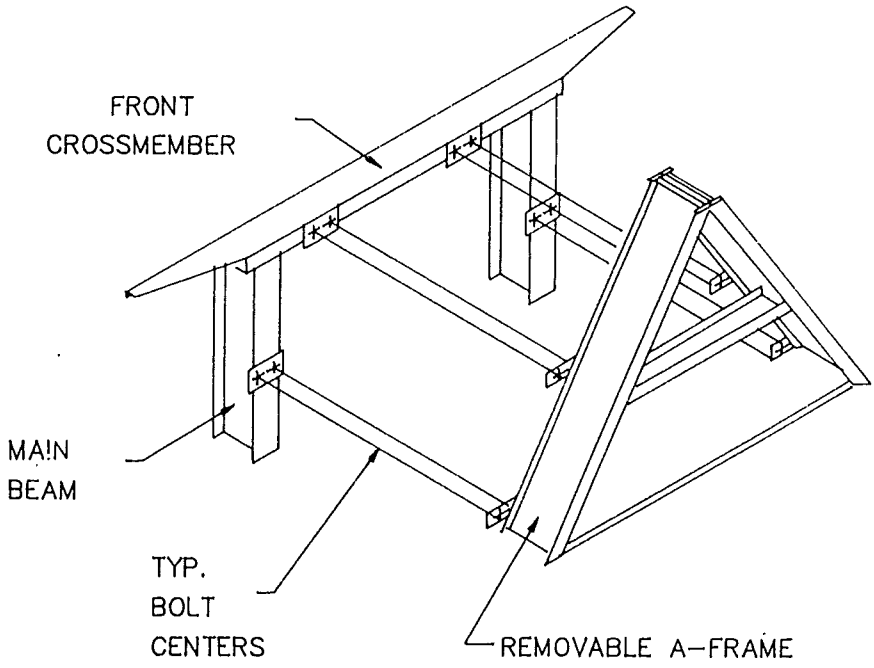

(NOTE: AS VIEWED FROM UNDERNEATH THE HOME.)

FIGURE 23

UTILITY SYSTEMS

UTILITY SYSTEMS

General

Before leaving the manufacturing facility, the gas, water, and drain line systems of your home were tested for tightness. In addition, the electrical system has been thoroughly tested. However, prior to connecting these systems to their supply, another test should be conducted to ensure that these systems are functioning properly.

All connections and testing of these systems must be made by an experienced installer. It is nevertheless highly recommended that you make personal inspections, particularly of any exposed water or drain line connections for concealed leaks, inside the home and underneath the home, and that you confirm that the electrical system has been properly grounded through the 4-wire feeder entrance as described in the Electrical Systems section of this instruction.

Water Distribution, Connection, and Testing

The water distribution system of your home has been equipped with a 3/4- inch threaded inlet connection located under your home. The location is marked on the side of the home with a tag stating "Fresh Water Connection." When connecting the site water supply to this connection, care must be taken to ensure that the threads and inside of the pipe are clean and clear of any obstruction which may have occurred while the home was in transit or on your dealer's lot.

The water distribution system was designed for a maximum water inlet pressure of 80 pounds per square inch. Should you locate your home in an area where the water pressure exceeds 80 pounds per square inch, a pressure reducing valve must be installed. In addition to the pressure reducing valve, if required, a full flow shut-off valve must be installed on the main feeder line adjacent to the home (see figure 24). This valve must be either a full port gate or full port ball valve with threaded or solder joints.

All water heaters have an approved, fully automatic valve designed to provide temperature and pressure relief. These valves are provided with a drain that discharges below your home. The opening in this drain should be inspected to ensure that it is clear of any obstruction which may have occurred while the home was in transit or on your dealer's lot.

In areas subject to freezing temperatures, all exposed water supply lines must be protected by wrapping with insulation and by using one or more listed electric heat tapes. Use only heat tapes that are listed and approved for use on manufactured homes. A receptacle outlet has been provided on the underside of your home in the area of the water inlet for the express use of the heat tapes.

CAUTION

ONLY U.L. LISTED HEAT TAPES SHOULD BE USED. THEY MUST BE INSTALLED IN ACCORDANCE WITH THEIR LISTINGS AND INSTALLATION INSTRUCTIONS. FAILURE TO FOLLOW THESE INSTRUCTIONS COULD RESULT IN AN ELECTRICAL HAZARD OR SHORT CIRCUIT WHICH COULD CAUSE A FIRE.

If your home is equipped with an uninsulated or vented (to allow for combustion air for a gas water heater) exterior water heater door, the exposed water lines within the water heater compartment must be insulated.

CAUTION

DO NOT BLOCK OR SEAL THE COMBUSTION AIR VENTS IN THE WATER HEATER DOOR.

Procedure for Testing the Water System

Testing the water distribution system can be performed by subjecting this system to a hydrostatic pressure of 80 pounds per square inch for 15 minutes without loss of pressure.

CAUTION

IF AIR ONLY IS TO BE USED IN TESTING THE WATER SUPPLY SYSTEM, THE WATER HEATER SHOULD BE ISOLATED FROM THE TEST.

This can be done by disconnecting the hot and cold water lines on the water heater and then joining them together. The piping can then be subjected to an air test of 100 per square inch for a period of 15 minutes. If the water heater is to be left connected to the system while conducting an air test, the pressure should never exceed 30 pounds per square inch. Even though water heaters have a working pressure from 125 to 150 per square inch, it is a hydrostatic or water pressure measurement. Subjecting a water tank to air pressure alone (if it exceeds 30 pounds per square inch) will create a possibility of damaging the tank or having the tank actually explode. **THEREFORE, NEVER APPLY AIR PRESSURE EXCEEDING 30 PSF (pounds per square inch) TO THE WATER SYSTEM UNLESS THE HOT WATER TANK IS ISOLATED FROM THE SYSTEM.**

Draining the Water Lines

To ensure that the water supply lines are completely drained it will be necessary to blow out the lines. The air pressure can be supplied by a low-pressure compressor (30 pounds per square inch maximum).

The procedure will be as follows:

1. Turn off water heater.
2. Turn off water supply.
3. Open all faucets throughout home.
4. Disconnect water supply inlet.
5. Open water heater drain valve, after attaching a hose to the valve so the water drains outside the home.
6. Let water supply system and water heater drain completely.
7. Flush toilets and drain water tanks completely.
8. Close all water faucets with the exception of one.
9. Connect 30 pounds per square inch air supply to water inlet connection.
10. With the air supply on the system, open one faucet at a time throughout the home.
11. After entire system has been drained of all water, disconnect the air supply and close off water inlet valve.
12. Pour an antifreeze solution into all drain traps, including sinks, tubs, and toilets. **BE SURE THAT THE ANTIFREEZE YOU USE IS SAFE FOR THE FIXTURES AND P-TRAPS.**
13. Do not overlook the laundry area if plumbed.

Waste Drainage System Connection and Testing

The waste drainage system in your home terminates in a standard 3-inch waste connection which is located underneath the home in the area of the bathroom. Depending on the design of the home and the number of bathrooms, a certain amount of site work may be necessary to complete the connections and bring the drain outlet to one point.

When connecting the drains into one outlet or routing the unit drain to the site drain, the system must be properly assembled, sloped, and supported. It is recommended that all the piping be cut and pre-assembled to make certain of fit prior to final assembly. A slope of 1/4 inch per foot of drain length is required for the drain system. However, where it is impractical due to the structural features or arrangement of the home, a slope of not less than 1/8 inch per foot is allowable providing there is a full-size cleanout installed at the upper end. This reduced slope applies only to the piping which brings the unit drain to the building site drain.

The drainage system must be properly supported to ensure proper slope and to eliminate any damage to the system or the possibility of a low spot developing which could cause the waste to back up. The supports must be located a maximum of 48 inches on center. Straps used to support the drain from the floor of the home must be at least 3/4 inches in width, .020 inches in thickness, and must be made to resist corrosion. Other approved hangers and supports may also be used in accordance with their listings (see figures 25 and 26).

Just prior to the connection of the home drainage system to the site drain, the system should be plugged and flooded to test for any leaks which may have developed in the system, due to in-transit vibrations, and in the site-installed piping. The procedure for this testing is as follows:

1. With the drainage system outlet tightly capped and the tub and shower drains plugged, fill the system with water until the toilet bowls are full to the bottom of the rim. The water should stand without the level falling for 15 minutes.

2. Fill fixtures which are higher than the toilet bowl (lavatories, sinks, etc.) with water. Check these fixture connections for leaks as you allow the water to flow through the system as the drains are opened.

3. Any leakage noted during these tests should be isolated and corrected prior to home occupancy.

In areas subject to freezing temperatures, all exposed drain lines should be protected by wrapping with insulation and by using one or more listed electric heat tapes where insulation alone is inadequate.

CAUTION

ONLY U.L. LISTED HEAT TAPES SHOULD BE USED. THEY MUST BE LISTED FOR USE WITH THE TYPE OF MATERIAL USED IN THE DRAINAGE SYSTEM AND MUST BE INSTALLED IN ACCORDANCE WITH THEIR INSTALLATION INSTRUCTIONS. FAILURE TO FOLLOW THESE INSTRUCTIONS COULD RESULT IN AN ELECTRICAL HAZARD OR SHORT CIRCUIT WHICH COULD CAUSE A FIRE.

Gas System Connection and Testing

The gas piping system was tested at the time of manufacture, however, it is essential that it be rechecked at the site for leaks that may have been caused by in-transit vibrations.

CAUTION

DO NOT APPLY MORE THAN THE SPECIFIED PRESSURE AS DAMAGE TO GAS VALVES AND/OR REGULATORS MAY RESULT.

Before a test is begun, the temperature of the ambient air and the piping should be approximately the same. Conduct the test when air temperatures will remain stable.

The gas piping system must be tested two ways:

1. Piping only - all appliances isolated.
2. Entire system - with appliances.

A. Piping only test:

1. Isolate all appliances from the system by closing all appliance shut-off valves.
2. Pressure must be measured with a mercury manometer or slope gauge calibrated in increments of not more than 1/10 pound.
3. Pressurize the system to 3 pounds per square inch.
4. Isolate the pressure source from the system.
5. The gauge must stand 10 minutes with no drop.
6. Release pressure and open all appliance shut-off valves.

B. Entire system test:

1. Pressurize the system to either
   a. 3/8 to 1/2 pounds per square inch, or
   b. 10 inches to 14 inches water column
2. Apply bubble solution to all appliance connections.

NOTE

PRIOR TO MAKING CONNECTION TO SITE SUPPLY, GAS INLET ORIFICES OF FURNACES, WATER HEATERS, AND APPLIANCES MUST BE CHECKED TO ENSURE THEY ARE SET UP FOR TYPE OF GAS TO BE USED — L.P. (LIQUIFIED PETROLEUM) OR NATURAL GAS. THE GAS PRESSURE SHOULD NOT EXCEED 7 INCHES TO 14 INCHES WATER COLUMN.

If conversion is required, individual appliance, furnace, or water heater manufacturers' instructions must be complied with.

Gas appliance vents shall be visually inspected to ensure that they have been connected to the appliance and roof jacks are installed and have not come loose during in-transit vibrations.

The gas connection to the gas supply should be made by an authorized representative of the gas company (see figure 27).

Oil Piping Connection and Testing

Homes which are equipped with oil burning furnaces must have the oil supply piping installed on site. Piping is not supplied by this company.

The furnace manufacturer's instructions must be consulted for proper pipe sizing and installation procedures.

In addition, unless the home is installed in a park with a centralized oil distribution system, an oil storage tank of suitable capacity must be installed outside the home in a location accessible for service and safe from fire and other hazards.

Oil tanks that feed vaporizing type oil furnaces must be installed so that oil flows by gravity. To achieve efficient gravity flow, the tank must be installed so that the bottom of the tank is at least 18 inches above the level of the furnace oil control, while the top of the tank is within 8 feet of the oil control level.

For gun type oil furnaces, the location of the oil storage tank is left to the discretion of the home owner. Since the furnace includes a fuel pump, the tank may be installed above or below ground. For tanks installed below ground, the filler neck should extend 1 foot above grade and a 1-1/4 inch diameter minimum vent pipe extending at least 2 feet above grade must be provided.

Regardless of the type of oil furnace served, or the tank location, the tank should be installed to provide a gradual slope toward the fill end or drain plug (if so equipped) to facilitate pumping or draining of water and sludge.

An accessible and approved manually operated shut-off valve must be installed at the oil tank outlet. Additionally, it is recommended that a suitable filter be installed in the fuel line near the tank to help trap dirt and water.

NOTE

ALL OIL STORAGE TANK AND OIL PIPING INSTALLATIONS MUST MEET ALL APPLICABLE LOCAL REGULATIONS AND SHOULD BE MADE ONLY BY EXPERIENCED, QUALIFIED PERSONNEL.

Before setting the system in operation, the tank installation and supply piping must be checked for leakage. The tank must be filled to capacity with the fuel to be burned and all joints in the system checked visually for leakage.

Electric System

Your home is designed to be connected to an electrical supply source rated at 120/240 Volts, 3-pole, 4-wire, 60-Hertz having an insulated neutral. In making the feeder connections to this power source, it is extremely important that wires of the correct size, insulation type, and material be used. If wire is incorrectly sized, the ampacity for that wire may be exceeded resulting in a voltage drop within your home or an overheating of the wire which will cause the circuit breaker to trip protecting the wire from a short circuit.

Ampacity is the safe carrying capacity of a wire expressed in amperes. The greater the amperes flowing, the greater the heat build-up within the wire. If the amperage is allowed to become too great, the wire may become so hot that it will damage the insulation. Should the insulation be damaged severely enough that the individual conductors come into contact with one another, a short circuit will result which could cause a fire. To avoid the possibility of a voltage drop or short circuit caused by improper wire sizing, refer to chart 5 for proper wire sizing.

Before locating your home at a permanent site or park, make certain that sufficient power is available. Insufficient power will result in the improper operation of motors, appliances, and lights which will further result in a more costly electrical service. Proper performance of your home's electrical system depends on a full 120/240 volts of

electrical power at an amperage equal to the rating of the main circuit breaker located in the distribution panel within your home. The amperage rating of the disconnect circuit breaker located in the disconnect box outside of your home must also be equal to that of the main circuit breaker in the distribution panel.

It is also vital for the protection of the occupants of the home that it be properly grounded. The only safe and approved method of grounding your home is through the electrical isolated grounding bar located in the distribution panel which grounds all noncurrent-carrying metal parts to the electrical system in your home to a single point. The ground conductor of the entrance feeder in turn connects the grounding bar to an electrical ground back through the feeder to the disconnect box (see figure 29). This means that for the 120/240 volt service, you must have a 3-pole, 4-wire feeder entrance.

NOTICE

THE MANUFACTURED HOME CONSTRUCTION AND SAFETY STANDARDS AND THE NATIONAL ELECTRICAL CODE PROHIBIT CONNECTING THE GROUNDING BAR AND THE NEUTRAL BAR TOGETHER IN THE DISTRIBUTION PANEL. THE GROUND AND THE NEUTRAL ARE INSULATED FROM ONE ANOTHER. IT IS EXTREMELY IMPORTANT THAT THE GROUNDING CONDUCTOR AND THE NEUTRAL CONDUCTOR FROM THE DISTRIBUTION PANEL IN THE HOME BE CONNECTED TOGETHER AT THE DISCONNECT BOX LOCATED OUTSIDE OF THE HOME (SEE FIGURE 29). FOR THIS REASON, ALL FOUR OF THE SERVICE ENTRANCE FEEDER WIRES ARE ABSOLUTELY ESSENTIAL.

WARNING

IF THE GROUNDING CONDUCTOR AND THE NEUTRAL CONDUCTOR ARE NOT CONNECTED TOGETHER AT THE DISCONNECT BOX AND THEN PROPERLY GROUNDED TO THE EARTH AS REQUIRED BY THE NATIONAL ELECTRICAL CODE, THE INDIVIDUAL BRANCH CIRCUIT BREAKERS LOCATED IN THE DISTRIBUTION PANEL WITHIN THE HOME WILL NOT FUNCTION AND A SHORT CIRCUIT AT ANY TIME COULD CAUSE AN ELECTROCUTION.

The electrical supply connection to the home may be made utilizing a raceway or buried cable. A raceway is provided from the distribution panel and is routed to the underside of the home. A junction box must be used to connect the home feeder raceway to the supply raceway beneath the home. This feeder installation must be in accordance with the National Electrical Code. The proper feeder conductor sizes and required junction box sizes are given in chart 5 and figure 29.

CAUTION

IF YOUR HOME IS EQUIPPED WITH AN ELECTRIC WATER HEATER, DO NOT TURN ON THE CIRCUIT BREAKER IN THE DISTRIBUTION PANEL UNTIL AFTER THE WATER HEATER HAS BEEN FILLED WITH WATER. ENERGIZING THE CIRCUIT PRIOR TO FILLING THE WATER HEATER WILL RESULT IN SEVERE DAMAGE TO THE HEATING ELEMENT WITHIN THE WATER HEATER.

Test Procedure for Electrical System

The electrical system should be tested to make certain there is no reversed polarity, open grounds, or shorts in the system. Such tests should be performed after the home has been completely set up and assembled, all metal structural and trim pieces have been installed, and the internal electrical connections have been made.

1. All exposed noncurrent-carrying metal parts that may become energized shall be effectively bonded. A test to confirm this bonding should be made **BEFORE** the home is connected to 120/240 VAC service.

2. Perform the following checks for proper bonding or continuity using an Ideal No. 61-030 Continuity Tester or equivalent. (This tester is a small pen flashlight using two "AA" batteries and utilizing a long wire lead with an alligator clamp.)

   a. Using the flashlight continuity tester, connect the alligator clip to a positive ground (metal skin, window frames on metal exterior units, floor duct riser, or a metal screw head on a receptacle or switch plate) and touch the body of the flashlight to each fixture canopy. The continuity light should light if each fixture is properly grounded.

   b. Using the continuity tester, check all appliances and vent fans. By touching the metal body of the flashlight to the appliance or fan and having the alligator clamp connected to a convenient ground, the light should come on if the appliance or fan is properly grounded.

   c. Using the same procedure, check the bonding between the following:

      (1) Metal register boot and convenient ground

      (2) Steel frame and metal roof

      (3) Steel frame and metal exterior skin

      (4) Steel frame and metal gas piping

      (5) Metal fireplace and convenient ground

      (6) Water heater and convenient ground

      (7) Furnace and convenient ground

      (8) Steel frame and metal EMT raceway to distribution panel where applicable

NOTE

BONDING IS NOT REQUIRED ON METAL INLET OF PLASTIC WATER SYSTEMS OR ON PLUMBING FIXTURES SUCH AS TUBS, FAUCETS, SHOWER RISERS, AND METAL SINKS WHEN CONNECTED ONLY TO PLASTIC WATER AND DRAIN PIPING. ANY INDICATION OF AN INADEQUATE BOND BETWEEN ANY OF THE ITEMS LISTED ABOVE WILL REQUIRE INVESTIGATION AND CORRECTION.

3. An additional check using the continuity tester should be conducted as follows:

   a. Using the flashlight continuity tester, connect the alligator clip to a positive ground, turn on all light fixture and appliance switches including all fans and the furnace, and touch the flashlight probe to the neutral bar in the electrical distribution panel and each connected

load. The continuity light should not light. If the continuity tester does light, it is an indication of an electrical short.

b. Should an electrical short to ground be indicated, the short must be isolated and corrected before connecting the power to the home from the source.

4. After the home is connected to 120/240 VAC service, make the following checks:

   a. Using a polarity checker, such as a Trinetics Ground Monitor GM-20 or equivalent, plug into each AC receptacle in the home noting an indication of reversed polarity, open grounds, or shorts. Any reverse polarity, open grounds, or shorts which are located must be investigated and repaired.

   b. Using a ground fault tester such as a Unitest GFI Circuit Tester or equivalent, check each ground fault circuit breaker or receptacle outlet for proper operation. Any ground fault breaker or receptacle outlet which does not operate properly should be replaced.

   c. Install light bulbs and/or fluorescent tubes in all fixtures and check for proper operation by turning on the appropriate switches. Repair or replace any inoperative light switches or fixtures.

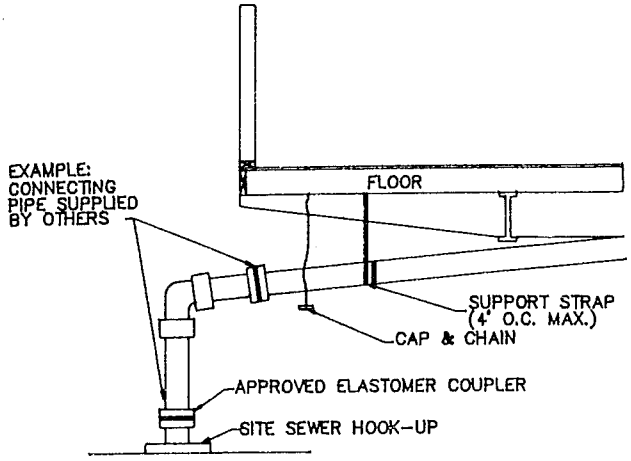

FIGURE 25

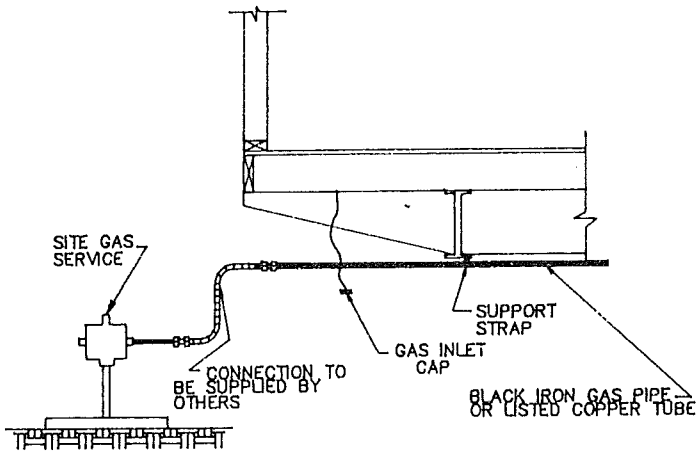

FIGURE 27

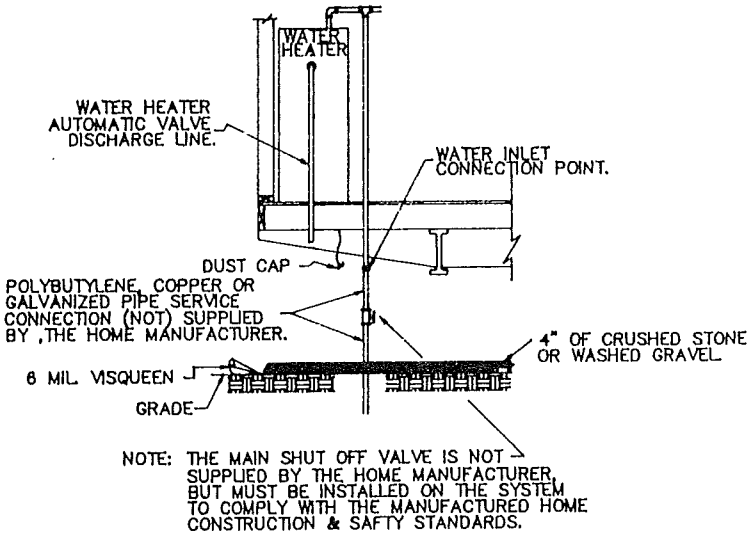

FIGURE 24

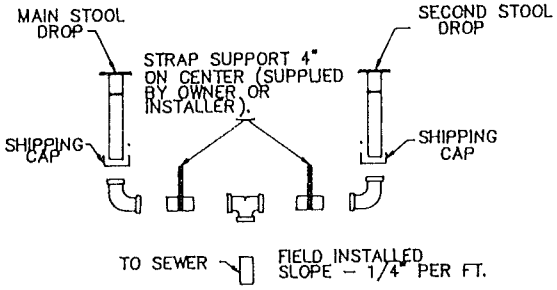

FIGURE 26

CHART NO. 5

ELECTRICAL FEEDER & EQUIPMENT SIZES					
FEEDER SIZE (See Main Breaker and Label on dis-tribution Panel) (AMPS)	MINIMUM SIZES		FEEDER CONDUCTOR SIZES (AWG) COPPER CONDUCTORS		
	Junct. Box (in.)	CONDUIT (in.)	Red & Black (Power)	White (Neutral)	Green (Grounding)
50 & 60	10x10x4	1 1/2"	No. 6 THW (Cu.)	No. 6 THW (Cu.)	No. 6 THW (Cu.)
100	10x10x4	1 1/2"	No. 3 THW (Cu.)	No. 3 THW (Cu.)	No. 8 THW (Cu.)
200	12x12x4	2"	No.3/0 THW (Cu.)	No.3/0 THW (Cu.)	No. 4 THW (Cu.)

NOTE: BASED ON 75° C, COPPER (CU.) WIRE.
Conductor Sizes Are In Accordance With The 1987 N.E.C. Table 310-16.
Note: They Do Not Take Into Consideration Voltage Drop.

NOTICE

METHOD OF WIRING & GROUNDING
THIS MANUFACTURED HOME

NOTE: ALL WIRES FROM THE PANEL BOX TO THE DISCONNECT MUST BE INSULATED, INCLUDING THE GROUND WIRE. ALL WIRES WILL BE COPPER.

(ALL FOUR WIRES ARE ABSOLUTELY ESSENTIAL.)

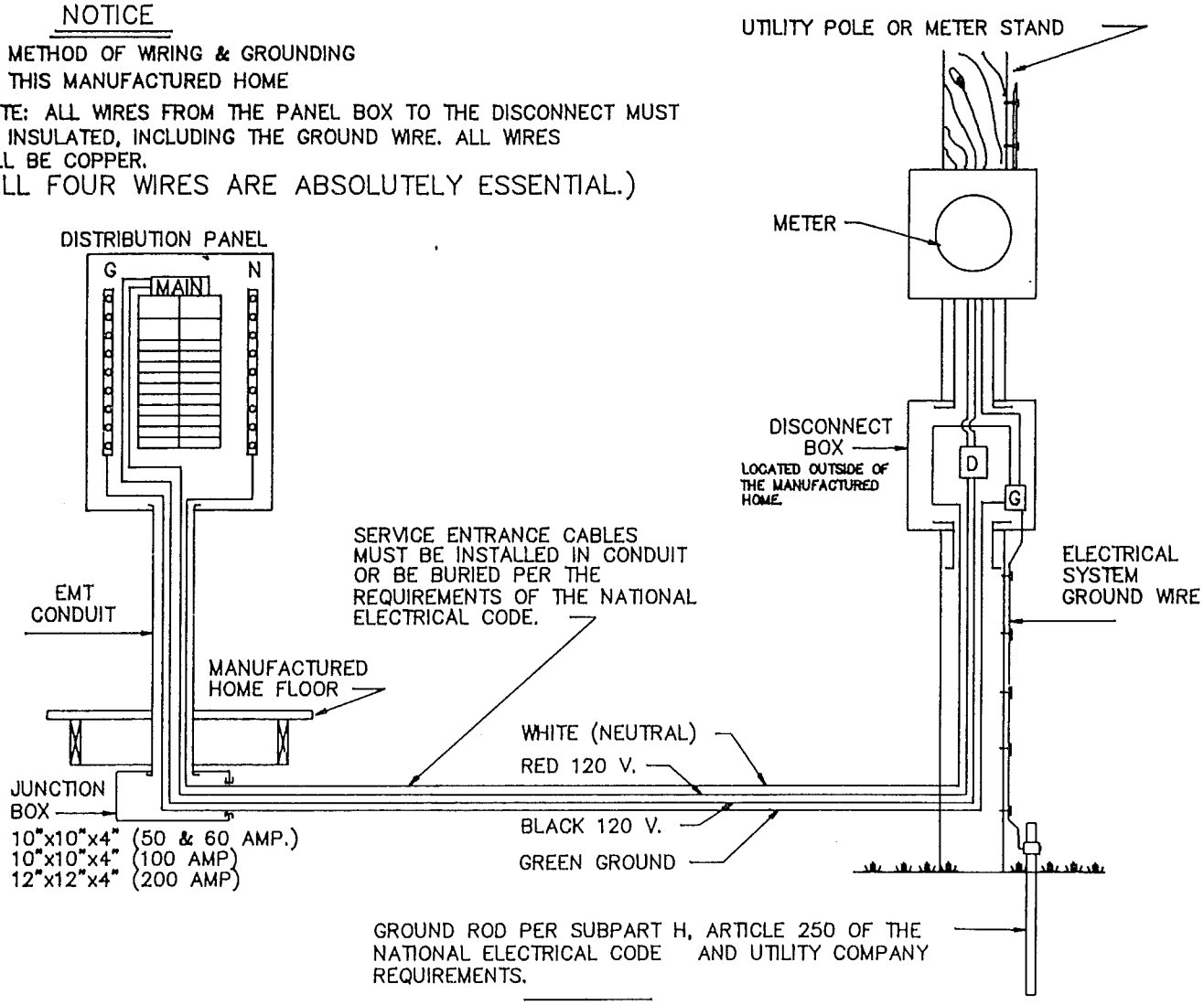

CAUTIONS

READ EVERY ITEM

1. NEVER DOUBLE-UP ON A CIRCUIT BREAKER.
2. NEVER REMOVE COVER FROM ENTRY PANEL.
3. NEVER OVERLOAD A CIRCUIT.
4. NEVER ADD ADDITIONAL CIRCUITS TO THIS PANEL.
5. NEVER REPLACE A CIRCUIT BREAKER WITH ONE HAVING A HIGHER AMPACITY RATING.
6. NEVER CONNECT THE ENTRY PANEL TO THE DISCONNECT BOX WITH A MANUFACTURED LIFE LINE (PIGTAIL CONNECTOR).
7. NEVER USE 3 WIRES IN PLACE OF 4, BECAUSE THE HOME WILL BE IMPROPERLY GROUNDED. WITHOUT THE 4 WIRE CONNECTION THE CIRCUIT BREAKERS WILL NOT FUNCTION AND A SHORT CIRCUIT AT ANY TIME COULD CAUSE AN ELECTROCUTION.
8. TRIPPED CIRCUIT BREAKERS OF A PROPERLY CONNECTED SYSTEM INDICATE A SHORT CIRCUIT OR OVERLOAD.

WARNING

THE FOURTH INSULATED CONDUCTOR, WHICH IS THE GROUND, IS ABSOLUTELY CRITICAL FOR SAFETY AND PREVENTION OF AN ELECTROCUTION IN THE EVENT OF A SHORT CIRCUIT.

FIGURE 29

INSTALLATION NOTES:

GROUND ANCHORING SYSYEM

Ground Anchoring System

All homes, whether manufactured or site constructed, must be securely fastened to the ground to resist the sliding and overturning effects of high winds.

This section will provide the information needed to properly install an anchoring system which will provide the resistance to lateral movement (sliding) and overturning (uplift) as follows:

Zone I A horizontal wind load of not less than 15 pounds per square foot and a net uplift of not less than 9 pounds per square foot increased by a factor of safety of 1.5.

Zone II A horizontal wind load of not less than 25 pounds per square foot and a net uplift of not less than 15 pounds per square foot increased by a factor of safety of 1.5.

Your home was designed for the wind conditions specified in the Structural Design Basis Certificate, Design Wind Zone Map, which is posted within your home near the electrical distribution panel or in a kitchen overhead cabinet.

CAUTION

ALTHOUGH LOCAL SHELTERED CONDITONS MAY SEEM TO PERMIT THE INSTALLATION OF YOUR HOME WITHOUT THE USE OF A PROPER ANCHORING SYSTEM, IT IS RECOMMENDED THAT THE ANCHORING SYSTEM BE USED IN ALL CASES FOR YOUR SAFETY AND COMFORT.

Design Criteria

1. The anchoring equipment shall be capable of resisting an allowable working load equal to or exceeding 3,150 pounds and shall be capable of withstanding a 50 percent overload (4,725 pounds total).

2. Anchoring equipment exposed to weathering shall have a resistance to weather deterioration at least equivalent to that provided by a coating of zinc on steel of not less than 0.30 ounces per square foot of surface.

3. Ground anchors shall be capable of resisting an allowable load of 3,150 pounds when such load is applied at an angle of 67 degrees to horizontal for the short anchor strap and 20 degrees to horizontal for the long anchor strap. This applies to both Zone I and Zone II.

4. Use a strap buckle around the main frame of the chassis for the connection of the diagonal ties. See figure 30.

5. Typical frame and ground connectors are illustrated in figures 31 through 33.

6. The tie down strapping used in conjunction with the above connectors shall be the equivalent of Type 1, Class B, Grade No. 1 steel strapping, 1-1/4 inches wide and .035 inches thick, conforming with Federal Specifications, QQ-S-781-H.

7. Other approved connectors may be used providing they meet the strength requirements outlined under this section. This would include galvanized aircraft cable at least 1/4 inch in diameter, galvanized turn- buckles, eyebolts, strap buckles, and cable clamps.

8. Ground anchors are to be an approved type and installed in accordance with the manufacturer's installation instructions supplied with the anchors. Ground anchors and anchor heads must be sized to resist a combined ultimate working load of 7000 pounds.

9. The materials necessary to anchor your home to the ground are not furnished with the home and may be obtained through your independent manufactured home dealer.

Installation Instructions - Frame Tie Down Procedure

1. As noted earlier in this instruction, the ground anchors must be installed prior to locating the home on the site in its final resting position. The exact location of the anchors outward from the main longitudinal I-beams under the home will be determined by the height of the pier supporting the home and as shown in figures 5, 6, and 7. The strap angles listed in item 3 under the heading "Design Criteria" must be maintained. The higher the supporting pier, the farther away from the I-beam the anchor must be located to maintain the design strap angle.

2. The ground anchor should be installed at the same angle as the diagonal tie so that the pulling force on the anchor is in line with the ties. Should this not be possible, a concrete collar shall be poured around the anchor shaft. The collar must be 10 inches in diameter and 18 inches deep. See figure 34.

3. The home must be in its final resting position and in proper working alignment prior to the installation of the anchor ties.

4. The diagonal ties (frame ties) must be spaced as evenly as practical along the length of the home with not more than 4 feet open end spacing at each end.

5. The diagonal ties (frame ties) required can be determined by reference to figure 35. The spacing requirements are based on your geographical area, Zone I or Zone II, as indicated on your Structural Design Basis Certificate, Design Wind Zone Map.

6. Expando and roll-out rooms will have vertical ties located at their exposed ends. See figure 36.

7. Connect the diagonal ties to the frame (I-beam) and the ground anchors. See figures 32, 33, and 36.

8. Tighten the straps using the tensioning device provided with the ground anchors. Use caution to avoid overtensioning of the straps which might pull the home off the piers. It is recommended that all straps be tightened only enough to remove the slack. Then, after all straps are installed and the slack removed, tension the straps.

9. The strap tension should be rechecked at frequent intervals until all pier settlement has stopped.

CAUTION

DURING ANY REALIGNING PROCESS, DO NOT JACK THE HOME AGAINST TIGHTENED GROUND TIES.

Optional Over-the-Roof Strap Procedure

NOTICE

OVER-THE-ROOF STRAPS ARE PROVIDED ONLY AS AN OPTIONAL ITEM TO ACHIEVE ADDITIONAL STABILITY IN EXTREME WINDS. THESE STRAPS MUST BE USED ONLY AS A SUPPLEMENT TO THE ENGINEERED FRAME TIE DOWN PROCEDURE DESCRIBED EARLIER IN THIS SECTION, WHICH IS STILL MANDATORY.

Materials not furnished with the home which will be necessary to properly connect the over-the-roof straps are:

1. Ground anchors capable of withstanding at least a 4,750-pound pull when installed in the soil at the site.

2. Strap end connection devices.

CAUTION

THE HOME MUST BE IN ITS FINAL ALIGNED POSITION WITH FRAME TIES INSTALLED BEFORE CONNECTING THE OVER-THE-ROOF STRAPS.

The procedure for over-the-roof strap installation is as follows:

1. Position and install the ground anchors so that the strap will be vertical after attachment to the anchor. The anchor may be installed slightly beneath the home to avoid interference with skirting. See figure 37.

2. Insert the connector yoke through the eye in the anchor and insert slotted bolt through the yoke.

3. Place end of strap through slotted bolt and remove slack by turning bolt. **DO NOT TENSION UNTIL BOTH ENDS OF STRAP ARE CONNECTED.**

4. Tension and lock connector in position; consult instructions furnished with connectors.

5. Check strap tension. See step 7 under "Frame Tie Down Procedure."

Alternate Procedures

1. Should your home be placed on a full concrete slab as shown in figure 12, the ground anchors may be replaced with anchor bolts imbedded in the concrete slab as shown. The location of the anchor bolt in relation to the longitudinal I-beams of the frame will be the same as for the ground anchors.

2. If for any special considerations at the home site you cannot use this ground anchoring system, you may have an anchoring system designed by a registered professional engineer or architect at the home owner's or installer's expense. The design criteria described earlier in this section should be used for loads, safety factors, and equipment specifications. The engineer or architect should inspect the installed system to ensure proper installation. Above all, your home must be properly anchored to the ground.

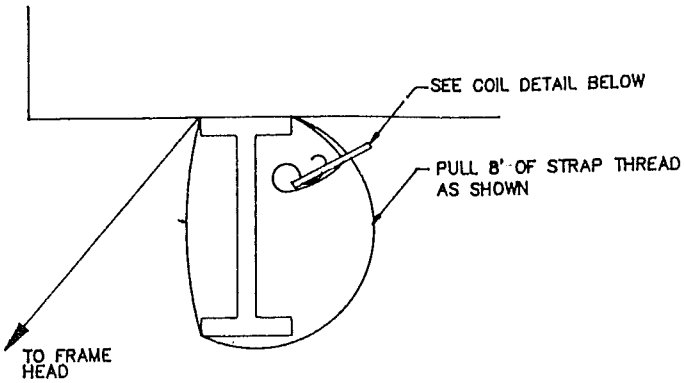

FIGURE 30

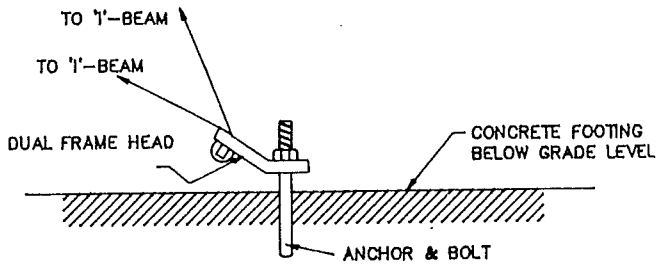

FIGURE 32

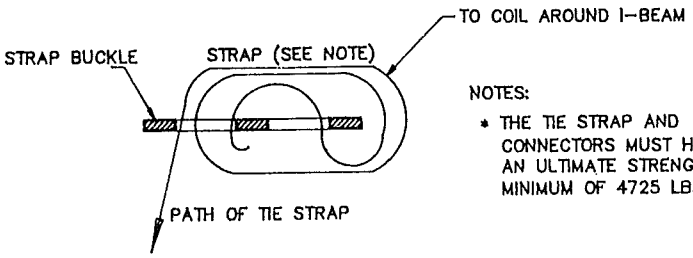

NOTES:

* THE TIE STRAP AND CONNECTORS MUST HAVE AN ULTIMATE STRENGTH MINIMUM OF 4725 LBS.

FIGURE 31

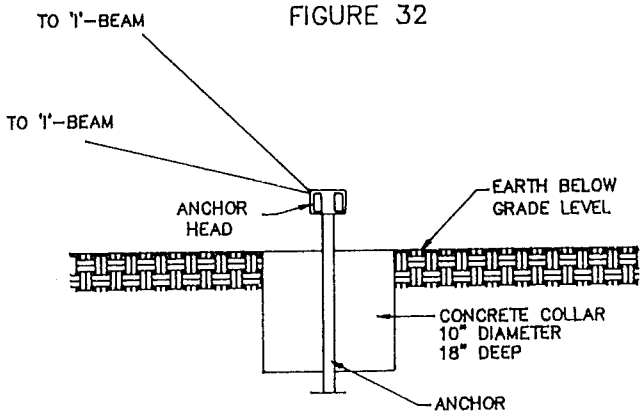

FIGURE 34

STATE OF OHIO
NED C. MYERS
37806
REGISTERED
PROFESSIONAL ENGINEER

NED C. MYERS
REGISTERED
No. 14617
STATE OF
INDIANA
PROFESSIONAL ENGINEER

Ned C. Myers
9/3/87

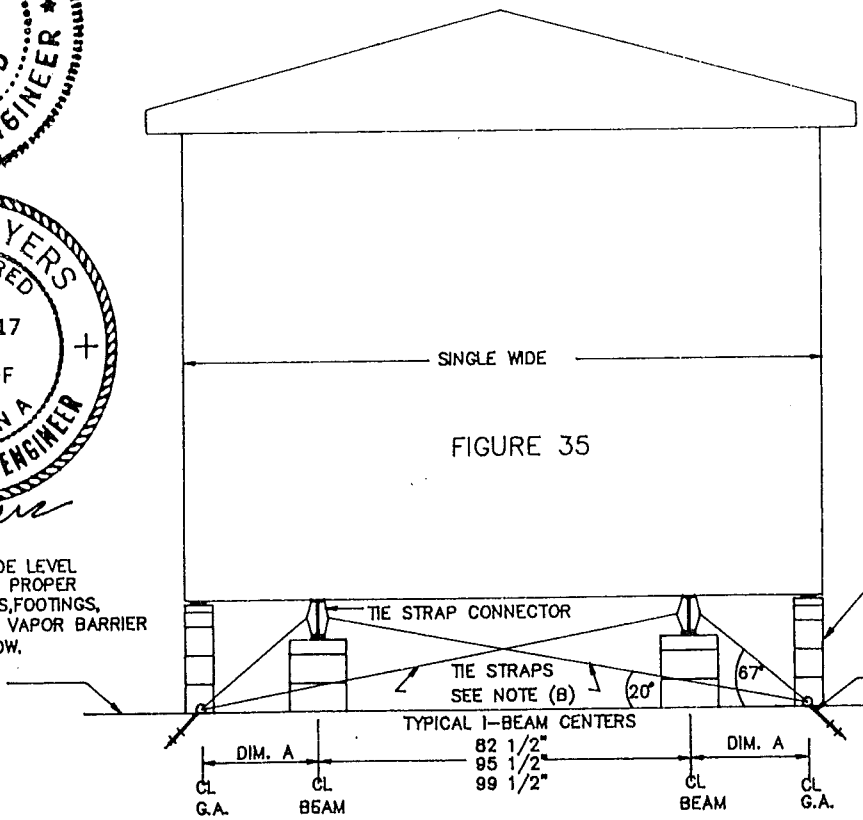

FIGURE 35

GENERAL NOTES

(A) THE ANCHOR MUST BE MINUTEMAN OR EQUAL (STANDARD ANCHOR BOLT MAY BE USED WITH MINUTEMAN DUAL HEAD ATTATCHMENT.)
ANCHOR AND ANCHOR HEAD MUST HAVE AN ULTIMATE WORKING STRENGTH OF 7000 LBS.
ZONE 1 WILL REQUIRE THE PLACEMENT OF ANCHOR BOLTS TO BE 20'-0" O.C.
ZONE 2 WILL REQUIRE THE PLACEMENT OF ANCHOR BOLTS TO BE 11'-0" O.C.

* GROUND ANCHORS (REGUARDLESS OF ZONING) MUST START NO FURTHER THAN 4'-0" FROM FRONT OF HOME & END NO LESS THAN 4'-0" FROM REAR OF HOME.
* SPECIAL: IF ANCHOR IS INSERTED VERTICAL A CONCRETE COLLAR, 10" IN DIAMETER AND 18" DEEP MUST BE USED AT GROUND LINE.
* ANCHOR BOLT USED FOR CONCRETE PAD ONLY. A GROUND SCREW ANCHOR IS TO BE USED IN ALL OTHER LOCATIONS.

(B) EACH OF THE STRAPS & CONNECTORS MUST HAVE AN ULTIMATE STRENGTH OF 4725 LBS.

DIM. A
AS NEEDED TO MAINTAIN THE PROPER STRAP ANGLES AS SHOWN.

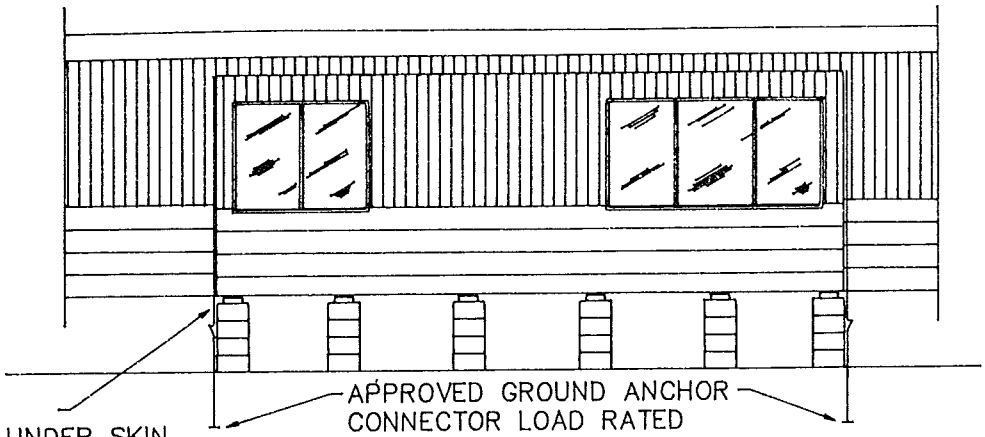

SIDE VIEW

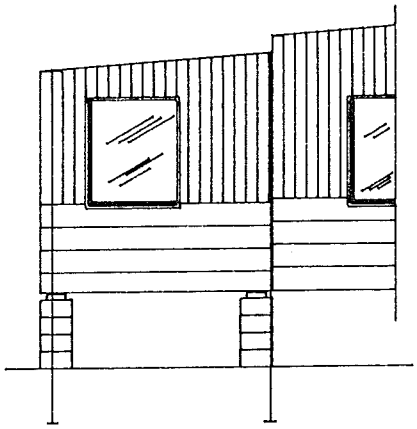

END VIEW

FIGURE 36

NED C. MYERS
REGISTERED
No. 14617
STATE OF
INDIANA
PROFESSIONAL ENGINEER

Ned C. Myers
9/3/87

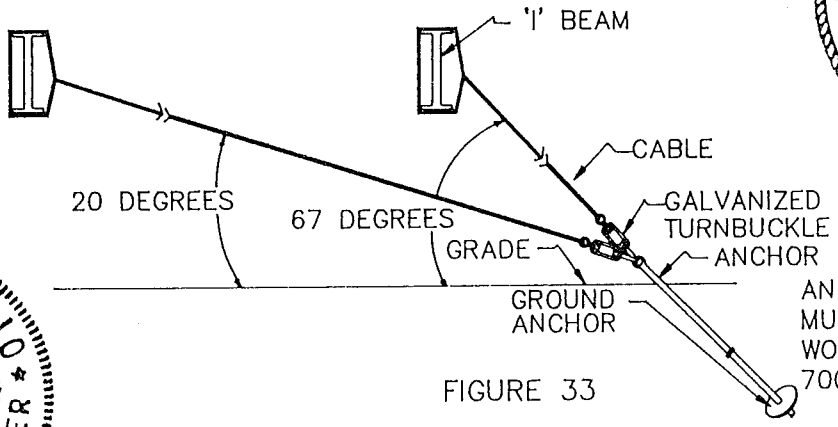

ANCHOR AND ANCHOR HEAD MUST HAVE AN ULTIMATE WORKING STRENGTH OF 7000 LBS.

FIGURE 33

STATE OF OHIO
NED C.
MYERS
27806
REGISTERED
PROFESSIONAL ENGINEER

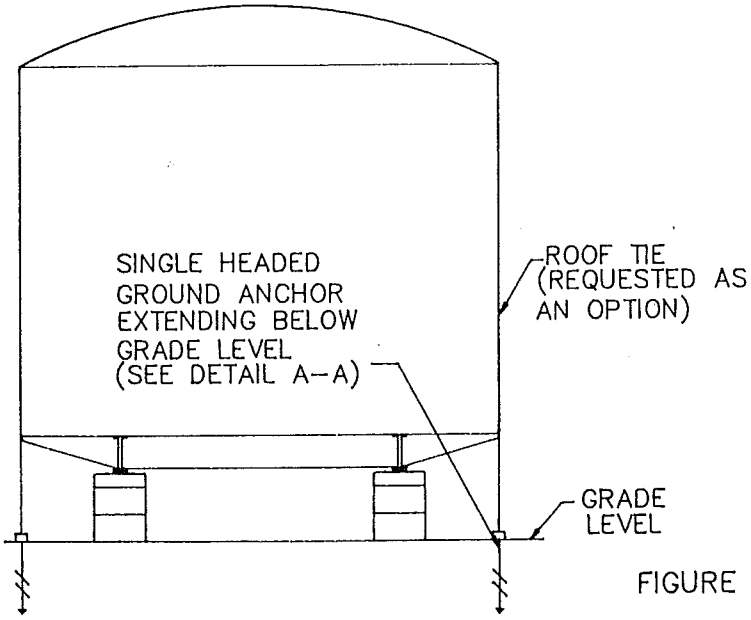

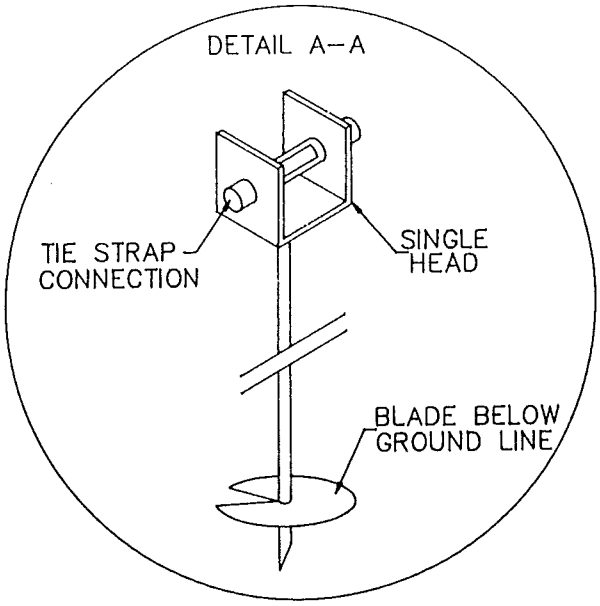

FIGURE 37

MISCELLANEOUS OPTIONS AND CONNECTIONS

MISCELLANEOUS OPTIONS AND CONNECTIONS

Central Air Conditioning

If your home was not provided with an air conditioning or make-ready-for-air-conditioning option and you want to install a central air conditioning system, you must first consult the Heating and Cooling Design Basis Certificate, Comfort Cooling section to determine whether your home has been constructed with an air distribution system designed for use with central air conditioning. This certificate is part of the Compliance Certificate which is located at the electrical distribution panel or in a kitchen overhead cabinet.

1. Self-Contained Air Conditioning Unit

If a self-contained central air conditioning unit is to be used (separate from the furnace) an automatic damper to prevent cooled air from blowing up into the furnace will have to be installed in the furnace base. Depending on the furnace installed in your home, this damper may already have been installed at the factory, or in some cases, the furnace may be of a type which is labeled as suitable for use with air conditioning without such a damper. In addition, the ducts carrying cooled air from the air conditioning unit into the home and return air from the home to the air conditioning unit must contain dampers or be installed in such a way so that when the furnace runs, heated air does not blow through these ducts into the air conditioning unit.

A combination heating/cooling thermostat will also have to be installed to prevent simultaneous operation of the furnace and the air conditioner.

The duct carrying cooled air from the air conditioner to the home should be connected to the bottom of the main duct located in the floor of the home. The connection should be located so that an equal number of floor registers are on each side of the connection. The floor joists within the floor of the home should not be notched or cut into in any way when installing the air conditioner supply duct.

A duct carrying return air from the home back to the air conditioning unit will be necessary. The return air register should be located so that air passage is not restricted, and it should be located between the floor joists within the floor. The floor joists must not be notched or cut into in any way when installing the return air duct.

2. A-Coil Air Conditioning Unit & Heat Pumps

If an A-coil air conditioning unit is installed, it must be listed for use with the furnace in this home. In many cases it will be necessary to change the furnace blower when installing this system.

3. General

NOTICE

ELECTRICAL CONNECTIONS MADE TO ENERGIZE AIR CONDITIONING EQUIPMENT SHOULD BE MADE ONLY BY QUALIFIED PERSONNEL. THE COMPLETED INSTALLATION MUST CONFORM TO ARTICLE 440 OF THE NATIONAL ELECTRIC CODE AND APPLICABLE LOCAL CODES.

Branch circuits installed at the factory for the purpose of energizing air conditioning or heat pump equipment will have a junction box located on the bottom side of the home. A data plate will be placed on the side of the home adjacent to this box outlining the maximum full load ampere draw for the indicated branch circuit. In installing air conditioning or heat pump equipment, do not exceed the indicated circuit rating. See figure 28.

When the electrical connection is made via a junction box beneath the home, the field installation wiring beyond the junction box must incorporate a fuse disconnect (size in accordance with NEC Article 440) located within sight of the condensing unit. The maximum fuse size to be used with the fuse disconnect is marked on the condenser data plate.

In all cases, the installation of air conditioning or heat pump equipment must be in accordance with the manufacturer's written installation instructions. The acceptability of the air conditioning equipment, rating and location of the disconnect, fused type branch circuit protection, and connections to the equipment are to be determined by the local inspection authorities.

Fireplaces

1. If your home is equipped with a built-in fireplace, it will be necessary to complete the installation of the round top assembly, rain cap, spark arrestor, and chimney pipe. See figure 38.

2. Install the storm collars over the roof flashing. The storm collar must rest on top of the flashing spacers. Install the tabs through the slot on the opposite end of the storm collar and push storm collar down over the chimney so that it rests on the roof flashing spacers. Pull the tab to tighten the storm collar against the chimney pipe. Seal top edge of storm collar with non-combustible waterproof sealant. See figure 39.

3. Install remaining section of chimney pipe and contemporary cap.

NOTE

THE TOP OF THE CONTEMPORARY CAP ASSEMBLY SHOULD EXTEND AT LEAST 3 FEET MINIMUM ABOVE THE POINT WHERE THE CHIMNEY EXITS THE ROOF AND AT LEAST 2 FEET ABOVE THE HIGHEST POINT WITHIN 10 FEET OF THE CHIMNEY.

4. Follow the manufacturer's instructions provided with your fireplace to install roof pipe connections along with general hints and maintenance to care for your fireplace.

Furnace Roof Jack

The furnace roof jack for your home may have been shipped loose to comply with transportation height requirements. A warning tag may be attached to the fuel supply line, the furnace, and the furnace thermostat if the furnace roof jack was shipped loose. The furnace roof jack and instructions for the installation of the roof jack are provided with your home.

WARNING

THE FURNACE ROOF JACK MUST BE INSTALLED BEFORE THE FURNACE IS OPERATED.

Optional Dryer Venting Installation

A gas or electric clothes dryer installed in the home must be exhausted to the outside by a moisture lint exhaust duct and termination fittings.

CAUTION

DRYER EXHAUST SYSTEM MUST NOT TERMINATE UNDERNEATH THE HOME.

1. An access panel is located in the dryer area to provide access to the dryer end of the duct system. See figure 40.

2. Access to rough in from outside may be located on the bottom side of the floor or on an exterior wall. See figure 40.

3. The exhaust system shall be completed on site as shown with materials provided by the owner. See figures 41 and 42.

Exhaust duct and termination fittings must be listed by an approved testing agency or certified as components of the dryer.

CAUTION

THE FACTORY-INSTALLED CLOTHES DRYER ELECTRICAL CIRCUIT IS SUPPLIED BY A CABLE CONTAINING 4 ELECTRICAL CONDUCTORS AND TERMINATES WITH A 4-PRONG RECEPTACLE. DO NOT CHANGE THE 4-PRONG RECEPTACLE TO A 3-PRONG RECEPTACLE. PURCHASE A 4-PRONG APPLIANCE CORD AND INSTALL IT ON YOUR DRYER.

Installation of Accessories

If additional decorative or functional accessories are to be attached to your home such as utility buildings, carports, skirting, and awnings, the following practices must be observed:

1. Read carefully and follow the instructions for any supplemental accessory which are provided by the manufacturer of such accessory. Always check to determine that the installation conforms to applicable building codes.

2. If direct attachment to the home is necessitated, make certain that solid structural members are behind the attachment point. In the event a carport or awning is being installed, it should be attached only along the top of the wall or the edge of the roof. Proper size fasteners should always be used, and interlocking parts should be carefully fitted.

3. In installing carports, awning rails, or small storage buildings, select a unit that is designed with support columns which will carry its own weight. As little weight as possible should be attached to the home itself.

4. All joints created by attaching accessories to the home should be properly sealed with weatherstripping and covered, if possible, with moulding or flashing. Attaching fasteners should be caulked or sealed. All holes or openings necessitated in the walls or roof of the home should be covered and sealed to insure against leakage.

CAUTION

MODIFICATIONS AND/OR ALTERATIONS OF YOUR HOME MAY MAR ITS APPEARANCE AND WEAKEN IT STRUCTURALLY WHICH COULD VOID YOUR WARRANTY RIGHTS.

Light Fixture and Ceiling Fan Installation

Some light fixtures and ceiling fans may not be installed when the home is built because of possible damage to the fixture while the home is being moved. These fixtures include exterior lights, ceiling fans, and chain hung interior fixtures. All fixtures must be grounded either by a fixture mounting screw or a fixture ground wire. In the case of a chain hung fixture, both are required. Typical installations are shown in figures 43 and 44.

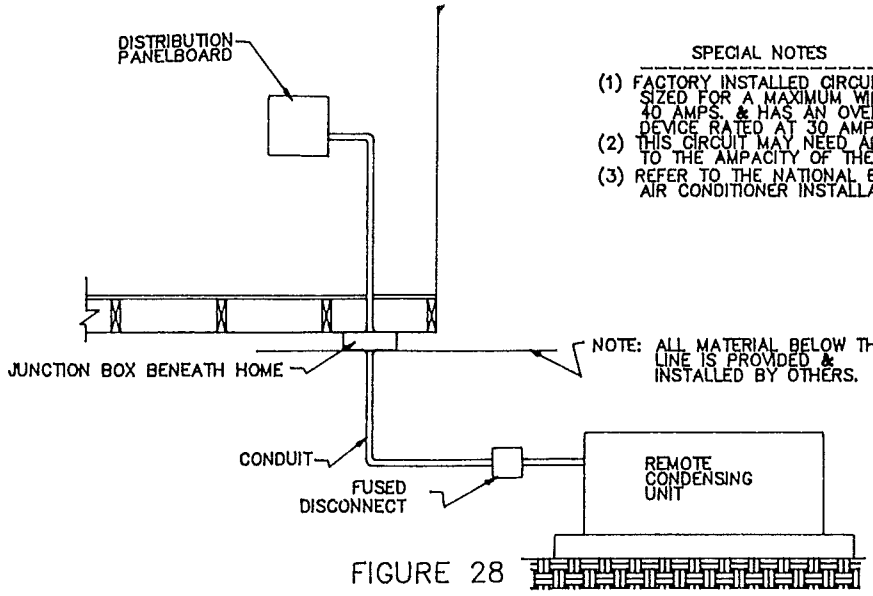

FIGURE 28

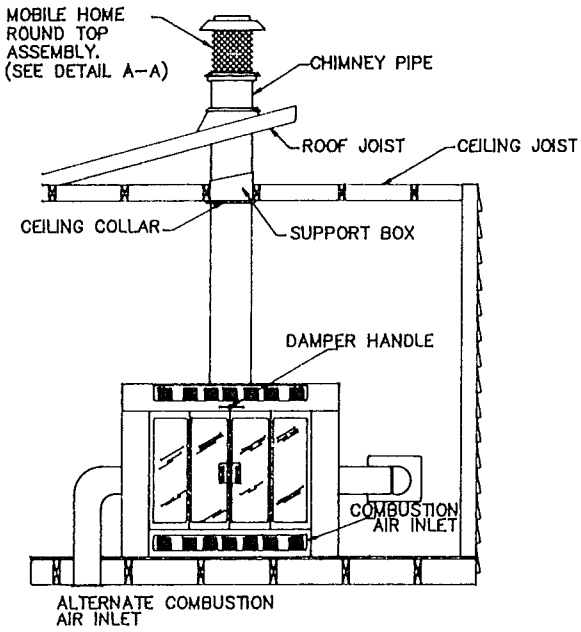

FIGURE 38

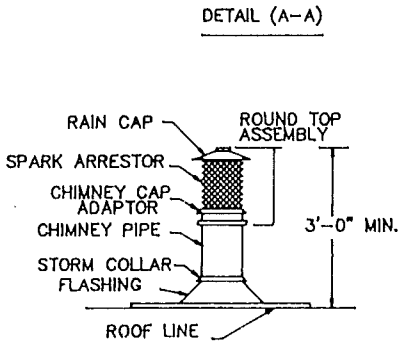

FIGURE 39

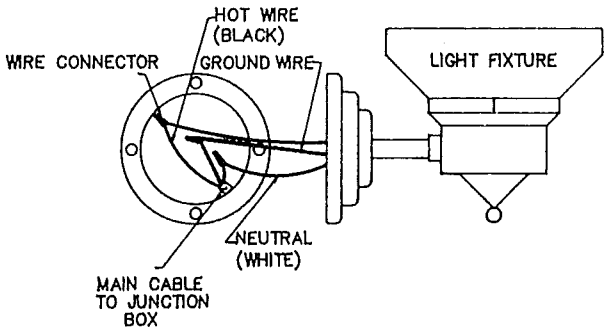

FIGURE 43

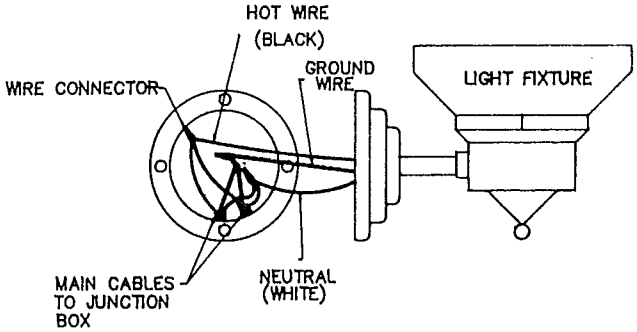

FIGURE 44

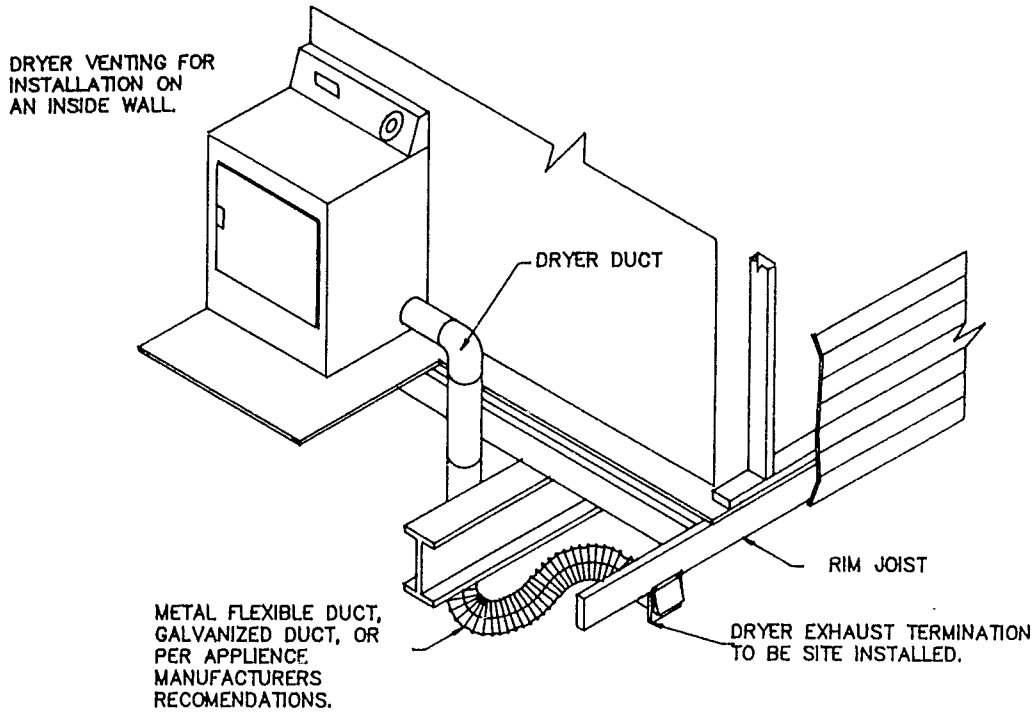

FIGURE 41

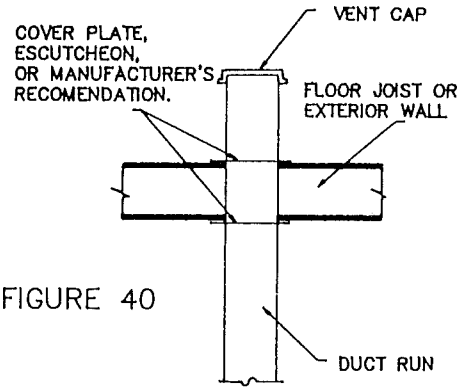

FIGURE 40

DRYER VENT DETAIL

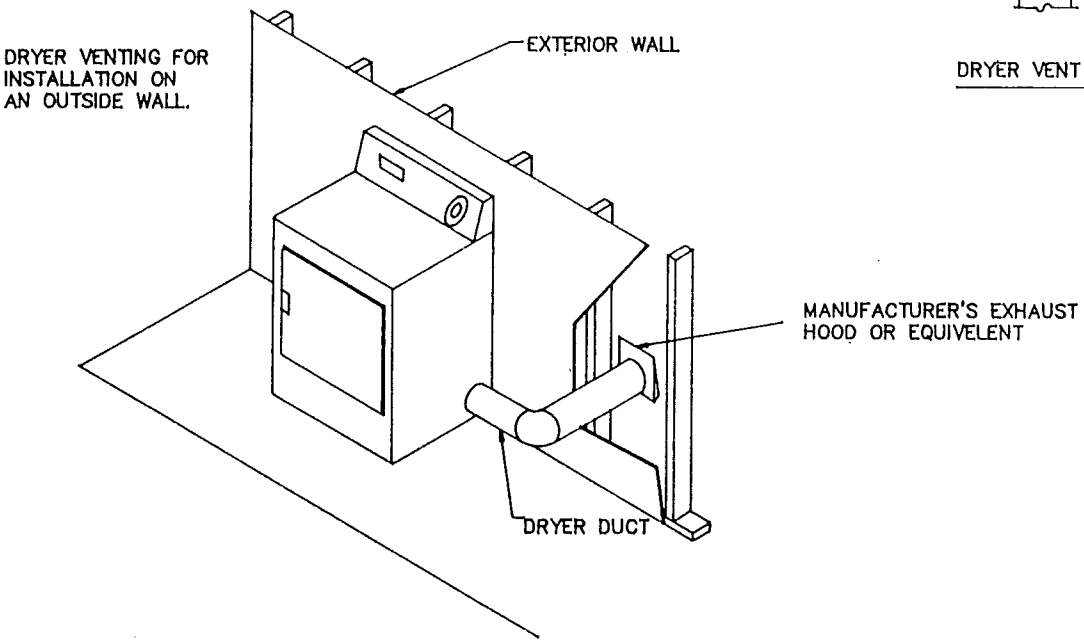

FIGURE 42

FINAL INSPECTION

FINAL INSPECTION

After your Fairmont home has been completely set up, a final inspection should be made to insure that no items have been overlooked which could cause a problem. Special emphasis should be placed on the following items:

1. Exterior Siding and Trim - A thorough check should be made of all portions of the exterior siding to make certain that it is not cracked or split, buckled, or loose in any manner. Any siding observed to be in this condition should be repaired or replaced. All fasteners that are loose should be retightened or replaced. All decorative trim pieces or moulding strips, including J-rail or moulding along the edge of the roof, should have special attention to make certain there are no gaps or voids in the sealant tapes or caulking material. If any such places are observed, they should be resealed.

2. Roofs - The roof should be checked to make certain that all stack head or vent pipe flashings are in place, properly attached, and properly sealed. If your home has a metal roof installed, it should be carefully observed for any signs of cracks or holes. All of the splice strips across the metal roof should be sealed with a caulking material at the roof edge, and any seam that has been cut through to install a stack head or a vent pipe flashing should be sealed from the vent to the ridge of the roof.

   In the event your home has a composition roof, the shingles should be checked for proper attachment, making certain that none are loose or have been displaced during transit.

NOTE

ON METAL ROOF APPLICATIONS, THE ROOF DOES NOT HAVE A SOLID SUB-ROOF MATERIAL. IF IT IS NECESSARY TO WALK ON THE ROOF FOR REPAIRS OR INSPECTIONS, PLYWOOD SHEETS OR BOARDS SHOULD BE USED TO DISTRIBUTE YOUR WEIGHT OVER RAFTERS. IF REQUIRED TO STEP DIRECTLY ON THE METAL ROOF, CARE SHOULD BE TAKEN TO AVOID PLACING YOUR WEIGHT DIRECTLY BETWEEN RAFTERS. YOU SHOULD ALWAYS ATTEMPT TO STEP DIRECTLY ON TOP OF A RAFTER. IF THIS IS NOT DONE, THE SEAMS ON THE METAL ROOF COULD BE DAMAGED.

3. Clearances - If there are any low-hanging trees or bushes adjacent to your home which could damage the exterior or the roof, they should be trimmed or cut accordingly. Future growth of these bushes or trees should be considered in connection with their possible movement during wind conditions or under snow or ice loads.

4. Caulking and/or Sealers - There are many good brands of caulking material and roof sealers which can be purchased from local retail stores. Whatever brand of caulking and/or sealer is purchased, the instructions regarding application should be read closely. This will include any special preparation of the surface to be coated. Observe the labeling on this material for any notes concerning

resistance to running or streaking the sides of the home. This can be very unsightly and, in many cases, extremely difficult to remove. Special detergents or etching agents may be required in some cases to clean the metal surfaces on which caulking or sealers are to be applied. Again, the manufacturer's instructions should be followed to the detail to prevent damaging roof and side metals.

5. Egress Windows - An egress window is provided for each bedroom and a label is located on the window to identify it and to provide opening instructions. The egress windows must be checked to assure that all shipping clips on screens, storm windows, and other appurtenances are removed so that quick and safe exit is possible. Check the window to assure it opens properly.

6. Exterior Doors and Storms - Exterior doors are provided with door plungers and chain stops. Doors must be checked to ensure that these items have been installed and adjusted.

Winter Precautions

In the event you elect to vacate your home during the winter months, care should be taken to ensure that adverse weather conditions will not damage your home.

1. Follow the procedures listed in the Utility Systems section to properly drain your water system and add antifreeze to your P-traps at all locations.

2. The heat should be left on to maintain a temperature that will not allow the build-up of moisture and the growth of mold. Moisture build-up can cause swelling or warping of materials and furnishings.

3. Provisions should also be made to inspect the home on a weekly basis to ensure that the skirting ventilators are open and not snow-covered and to remove any ice and snow build-up along the eaves, as stated in the Home Owners Manual, to prevent the water created by melting ice and snow from backing up under the shingles or entering the home by other means.